Original instructions

Double pallet stacker

SXD-20

1615

first in intralogistics

11648011551 EN - 06/2018

Address of manufacturer and contact details

STILL GmbH
Berzeliusstraße 10
22113 Hamburg, Germany
Tel. +49 (0) 40 7339-0
Fax: +49 (0) 40 7339-1622
Email: info@still.de
Website: http://www.still.de

1 Introduction

Your industrial truck 2
General 2
CE labelling 3
Copyright and property rights 3
EC declaration of conformity 4
Identification label 5
Rules for the operating company of industrial trucks 5
Proper usage 7
Description of use and climatic conditions 7
Unauthorised use 8
Explanation of symbols used 8
Disposing of components and batteries 8

2 Safety

Safety regulations 10
Safety regulations for handling consumables 11
Permissible consumables 11
Oils 11
Hydraulic fluid 12
Battery acid 12
Disposal of consumables 13
Emissions 14
Noise emission values 14
Vibration characteristics for vibrations to which the body is exposed 14
Residual dangers, residual risks 15
Stability 15
Definition of responsible persons 15
Operating company 15
Specialist 16
Drivers 16
Safety tests 17
Regular safety inspection of the truck 17

3 Overviews

Overview 20
Truck overview 20
General view of the technical compartment 21

Control and display elements 22
Dashboard elements 22
Electronic key (option) 23
Display operating unit 25

Markings 26
Location of markings 26
Serial number 27

4 Use

Technical description 30

List of checks prior to start-up 32

Checks and actions prior to commissioning 33
Start-up 33
Checking the emergency shutdown 33
Checking the brakes 34
Checking the horn 35

Truck operating instructions 36

Climbing on and off the truck 38

Operator presence pedal 39

Using the display operating unit 40
Selection buttons 40
Display of the drive wheel position 40
Operation of the display unit 41

Driving safety guidelines 45

Driving 46
Definition of directions 46
Start-up 46
Driving 47
Braking 48
Horn 49
Drive program 49
Using the truck on a slope 50
Steering Knob option 52

Operating the FleetManager™ option . . . 53
Description of the FleetManager option . . . 53
Commissioning a truck equipped with the FleetManager™ option . . . 54
FleetManager™ option: Colour code for the LEDs . . . 55
Disconnecting a truck equipped with the FleetManager™ option . . . 57

Transporting loads . . . 59
Load handling safety rules . . . 59
Grabbing a loading unit . . . 59
Transporting pallets or other containers . . . 60
Lift control elements . . . 61
Progressive stopping of the carriage in the lower position . . . 62
Reading the capacity label . . . 63
Handling a single load . . . 64
Handling two stacked pallets . . . 68

Cold store usage (optional) . . . 71

Parking the truck. . . . 73

Handling the battery . . . 74
Battery type . . . 74
Order picking . . . 74
Opening and closing the battery hood . . . 75
Changing the side access battery . . . 76
Charging the battery using an external charger . . . 82

Handling the truck in an emergency . . . 84
Emergency mast lowering . . . 84
Truck towing procedure . . . 85

Handling the truck in specific situations . . . 87
Slinging the truck . . . 87
Lifting the truck . . . 88
Transporting the truck . . . 88
Transporting the truck in the lift . . . 89
Driving on loading bridges . . . 89

5 Maintenance

General maintenance information . . . 92
General . . . 92
Servicing and maintenance personnel training and qualification . . . 93
Battery maintenance staff . . . 93
Maintenance operations that do not require special training . . . 93
Ordering spare parts and consumables . . . 93

Safety guidelines for maintenance 94
Servicing and maintenance measures 94
Working on the electrical equipment 94
Safety devices 94
Recommended lubricants 95
Technical data for inspection and maintenance 96
Accessing the technical compartment 97
Maintenance plan as required 99
1000-hour/annual maintenance plan 100
5000-hour maintenance plan 100
10,000-hour service plan 101
Chassis, bodywork and fittings 102
Cleaning the truck 102
General information on battery maintenance 104
Checking the condition of the forks 105
Steering and wheels 106
Maintaining the wheels and rollers 106
Electrical equipment 107
Cleaning and blowing out the electrical components 107
Checking the fuses 107
Checking the battery acid level and electrolyte density 108
Checking the condition of cables, terminals and the battery connector 109
Hydraulic systems 110
Checking the hydraulic system for leaks 110
Check the hydraulic oil level 111
Lift mast 112
Cleaning and lubricating the chains 112
Adjusting the length of the mast chains 112
Checking the protective screen 113
Storage and putting out of commission 114
Storage of truck 114
Permanent Putting Out of Commission (Destruction) 115

6 Technical features

SXD 20 datasheet 118
Mast types 122

1

Introduction

Your industrial truck

General

The truck described in these operating instructions corresponds to the applicable standards and safety regulations.

If the truck is to be operated on public roads, it must conform to the existing national regulations for the country in which it is being used. The driving permit must be obtained from the appropriate office.

The truck has been fitted with state-of-the-art technology. Following these operating instructions will allow the truck to be handled safely. By complying with the specifications in these operating instructions, the functionality and the approved features of the truck will be retained.

Get to know the technology, understand it and use it safely - these operating instructions provide the necessary information and help to avoid accidents and to keep the truck ready for operation beyond the warranty period.

Therefore:

- Before commissioning the truck, read the operating instructions and follow the instructions.
- Always follow all of the safety information contained in the operating instructions and on the truck.

CE labelling

The manufacturer uses CE labelling to indicate that the truck complies with the standards and regulations valid at the time of marketing. The supplied EC declaration of conformity confirms this. The CE labelling is attached to the nameplate.

An independent structural change or an addition to the tow tractor can compromise safety, thereby invalidating the EC declaration of conformity.

The EC declaration of conformity must be carefully stored and made available to the responsible authorities.

▷

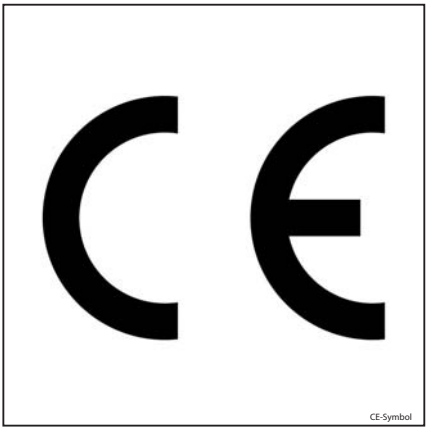

CE-Symbol

Copyright and property rights

This manual - and any excerpts thereof - may not be reproduced, translated or transmitted in any form to third parties without the express written permission of the manufacturer.

EC declaration of conformity

Declaration

STILL GmbH
Berzeliusstrasse 10
22113 Hamburg
GERMANY

We declare that the machine

Industrial truck	**according to these operating instructions**
Model	**according to these operating instructions**

conforms to the latest version of the Machinery Directive 2006/42/EC.

Person authorised to compile the technical documents:

See EC compliance declaration

STILL S.A.S.

The manufacturer declares that the truck complies with the requirements of the EC directives valid at the time of marketing. This is confirmed by the EC declaration of conformity and by the EC labelling on the nameplate.

An independent structural change or addition to the truck can compromise safety, thus invalidating the EC declaration of conformity.

The EC declaration of conformity must be carefully stored and made available to the relevant authorities.

Identification label

NOTE

Indicate the serial number for all technical enquiries.

▷

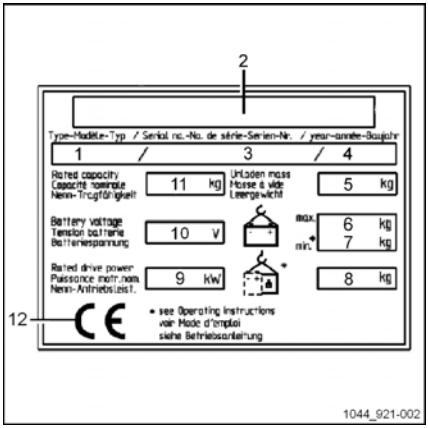

1	Model
2	Manufacturer
3	Serial number
4	Year of manufacture
5	Unladen weight (without battery) in kg
6	Battery maximum weight
7	Battery minimum weight
8	Additional weight (ballast) in kg
9	Nominal motor power (kW)
10	Battery voltage V
11	Rated capacity in kg
12	EC conformity symbol

Rules for the operating company of industrial trucks

In addition to these operating instructions, a code of practice containing additional information for the operating companies of industrial trucks is also available.

This guide provides information for handling industrial trucks:

- Information on how to select suitable industrial trucks for a particular area of application
- Prerequisites for the safe operation of industrial trucks
- Information on the use of industrial trucks
- Information on transport, initial commissioning and storage of industrial trucks

Internet address and QR code

▷

The information can be accessed at any time by pasting the address **https://m.still.de/vdma** in a web browser or by scanning the QR code.

Proper usage

The truck described in these operating instructions is suitable for lifting, transporting and stacking loads.

The truck should only be used for the purposes for which it was designed, as described in these instructions.

If the truck needs to be used for purposes other than those specified in these instructions, you should first:

- Obtain permission from the manufacturer
- Obtain permission from the competent authorities, if applicable

The purpose of obtaining these permissions in advance is to limit danger as far as possible.

The capacity label specifies the maximum load that can be raised. This limit must not be exceeded.

Description of use and climatic conditions

Normal use

- Indoor and outdoor use.
- Ambient temperature in tropical and Nordic regions ranging from -10°C to 45°C
- Start capability from -10°C to 45°C.
- Maximum start time of 20 seconds
- Use at up to 2000 metres above sea level.

Special use (partly with special measures) for trucks equipped with Gel or Lead batteries

- Use, for example, in the event of abrasive dust (such as AL203), lint, acid, leach, salt and incombustible substances.
- Ambient temperature in tropical regions up to 55 °C.
- Start capability at -25°C.
- Use at up to 3,500 metres above sea level.

Unauthorised use

Any danger caused as a result of unauthorised use becomes the responsibility of the operator or driver and not that of the manufacturer.

Use for purposes other than those described in these operating instructions is prohibited.

Transporting people is prohibited.

The forklift truck should not be used in areas where there is a risk of fire, explosion or corrosion, or in areas that are particularly dusty.

Stacking or unstacking is not permissible on inclined surfaces or ramps.

Explanation of symbols used

DANGER

Compulsory procedure that must be followed to avoid life-threatening danger or physical harm.

WARNING

Compulsory procedure that must followed to avoid injury.

CAUTION

Compulsory procedure that must be followed to avoid damage to and/or destruction of equipment.

NOTE

For technical requirements that require special attention.

ENVIRONMENT NOTE

To prevent environmental damage.

Disposing of components and batteries

The truck is made up of different materials.

If components or batteries must be replaced and scrapped, they must be:

- disposed of
- treated or
- recycled in accordance with regional and national regulations

NOTE

The documentation provided by the battery manufacturer must be observed when disposing of batteries.

ENVIRONMENT NOTE

We recommend working with a waste management company when disposing of components and batteries.

2

Safety

Safety regulations

These operating instructions, which come with the truck, must be communicated to all those concerned and in particular to personnel responsible for maintenance and driving.
The employer must make sure that the forklift operator has properly understood all the safety information.

Please observe the directives and safety regulations attached, in particular:

- Information concerning the use of materials handling trucks
- Regulations concerning traffic lanes and working areas
- Appropriate behaviour, rights and responsibilities of the driver
- Use in particular areas
- Information about the weight and dimensions of pallets or any other container
- Information concerning starting, driving and braking
- Information concerning maintenance and repair
- Regular checks and technical inspections
- Recycling of lubricants, oils and batteries
- Residual risks.

Care is recommended both for the user and the person in charge (employer) with regard to adhering to all safety rules concerning the use of material-handling trucks.

When instructing forklift operators, we recommend the following points are emphasized:

- The features of the truck
- The special accessories
- The specific features of the working environment.

Train the user in how to drive the truck, until it is under proper control.

Then, and only then, proceed to transferring pallets.

Forklift truck stability is guaranteed when the unit is used correctly.

Safety regulations for handling consumables

Permissible consumables

⚠ WARNING

Consumables can be dangerous.

It is necessary to follow the safety regulations when handling these substances.

Refer to the maintenance data table for the permissible substances necessary for operation.

Oils

⚠ DANGER

Oils are flammable!

- Follow the statutory regulations
- Do not allow oils to come into contact with hot motor parts.
- No smoking, fires or flames!

⚠ DANGER

Oils are toxic!

- Avoid contact and consumption
- In case of inhalation of steam or fumes, breathe fresh air immediately.
- After contact with the eyes, rinse thoroughly with water (for at least 10 minutes) and then consult an eye specialist.
- If swallowed, do not induce vomiting. Seek immediate medical attention.

⚠ WARNING

Prolonged intensive contact with the skin can result in loss of skin oils and cause irritation.

- Avoid contact and consumption.
- Wear protective gloves!
- After any contact, wash the skin with soap and water and then apply a skin care product.
- Immediately change soaked clothing and shoes.

⚠ WARNING

There is a risk of slipping on spilled oil, particularly when combined with water!

- Collect spilled oil immediately using an oil-binding agent and dispose of it in accordance with regulations.

ENVIRONMENT NOTE

Oils are water pollutants!

Always store oil in containers that comply with the applicable regulations.

Avoid spilling oils.

Collect spilt oil immediately using an oil binding agent and dispose of it in accordance with regulations.

Dispose of old oils according to the applicable regulations.

Hydraulic fluid

WARNING

During operation of the forklift truck, hydraulic fluids are pressurised and are hazardous to your health.

- Do not spill these fluids!
- Follow the statutory regulations
- Do not allow the fluids to come into contact with hot motor parts.
- Do not allow to come into contact with the skin.
- Avoid inhaling the spray
- Penetration of pressurised fluids into the skin is particularly dangerous if these fluids escape at high pressure due to leaks in the hydraulic system. In case of such injury, seek medical advice immediately.
- To avoid injury, use appropriate personal protective equipment (e.g. protective gloves, industrial goggles, skin protection and skin care products).

Hydraulic fluid is a water-polluting substance!

Always store hydraulic fluid in containers complying with the regulations.

Avoid spilling.

Spilt hydraulic fluid should be removed with oil-binding agents at once and disposed of according to the regulations.

Dispose of old hydraulic fluid according to regulations.

ENVIRONMENT NOTE

Battery acid

WARNING

Battery acid contains dissolved sulphuric acid. This is toxic.

- Avoid contact and consumption.
- In case of injury, seek medical advice immediately.

WARNING

Battery acid contains dissolved sulphuric acid. This is corrosive.

- When working with battery acid, always wear protective clothing and eye protection.
- Do not allow any acid to get onto the clothing or skin or into the eyes; if this does happen, rinse immediately with plenty of clean water.
- In case of injury, seek medical advice immediately.
- Immediately rinse away spilt battery acid with plenty of water.
- Follow the statutory regulations

ENVIRONMENT NOTE

– Dispose of used battery acid in line with the applicable regulations.

Disposal of consumables

ENVIRONMENT NOTE

Materials that have to be disposed of following maintenance, repair and cleaning must be systematically collected and disposed of in accordance with regulations. Observe the national regulations for your country. Work may only be carried out in areas designated for this purpose. Take care to minimise, as far as possible, any impact on the environment.

- Any spillage of fluids such as hydraulic oil, brake fluid or gear lubricant oil must be immediately soaked up with an oil-binding agent.
- The regulations for disposal of used oil are applicable.
- Any spillage of battery acid must be neutralised immediately.

Emissions

Noise emission values

Calculated during the test cycle performed in accordance with standard EN 12053.

Acoustic pressure level on the driver's compartment			
SXD 20	L_{PAZ}	=	67 dB (A)
Uncertainty	K_{PA}	±	2.5 dB (A)

NOTE

Lower or higher noise values may occur when using industrial trucks, e.g. due to the mode of operation, environmental factors and other sources of noise.

Vibration characteristics for vibrations to which the body is exposed

The values were determined according to EN 13059 using trucks with standard equipment according to the datasheet (driving over test course with humps).

Specified characteristics for upper limb vibrations	
Vibration characteristics	< 2.5 m/s^2

NOTE

The vibration characteristics for bodily vibrations cannot be used to determine the actual load level of vibrations during operation. This depends on the operating conditions (state of ground, mode of operation etc.) and should therefore be determined on site, where appropriate. It is mandatory to specify the hand-arm vibrations even where the values do not indicate any hazard, as in this case.

Residual dangers, residual risks

Despite all operational precautions and compliance with standards and rules, the possibility of additional risks when using the truck cannot be entirely excluded.

The truck and all its components comply with the regulations relating to current applicable safety rules.

Persons in the vicinity of the truck must be particularly cautious and react immediately in the event of any malfunction, incident, breakdown etc.

⚠ WARNING

Personnel in contact with the truck must be informed of the risks related to using the truck.

These operating instructions draw your attention to the safety rules.

The risks are:

- Escape of consumables due to leaks, ruptured lines and tanks etc.
- Risk of accident when driving over difficult ground such as slopes, soft or irregular surfaces or in poor visibility etc.
- Falling, tripping etc. when moving on the industrial truck, especially in the wet, with leaking consumables or icy surfaces.
- Loss of stability due to the load being unstable or the load slipping etc.
- Risk of fire and explosion due to batteries and electrical voltages.
- Human error - Disregarding safety regulations.

It is important to adjust the speed of the truck depending on the load and ground conditions.

The stability of the truck has been tested to the latest standards. These standards only take account of the static and dynamic tilting forces that can arise during operation that complies with the specifications and operating rules. Risks caused by misuse or incorrect operation that jeopardise the stability cannot be ruled out in extreme situations.

Stability

Forklift truck stability is guaranteed only if the unit is used according to the indicated recommendations.

It is not guaranteed in the event of:

- cornering at excessive speeds
- moving with the load raised
- moving with a load that is protruding to the side (e.g. sideshift),
- turning and driving diagonally across descents or ascents,
- driving on descents or ascents with the load on the downhill side,
- loads that are too wide or too heavy,
- driving with a swinging load,
- ramp edges or steps.

Definition of responsible persons

Operating company

The operating company is the natural or legal person or group who operates the truck or on whose authority the truck is used.

The operating company must ensure that the truck is only used for its intended purpose and

in compliance with the safety guidelines set out in these operating instructions.

The operating company must ensure that all users read and understand the safety information in these instructions.

The operating company is responsible for the scheduling and correct performance of regular safety checks.

It is recommended that these checks comply with national performance specifications.

Specialist

A specialist is deemed to be:

- A person whose experience and technical training has allowed him to develop relevant knowledge of industrial trucks
- A person who is also familiar with national health and safety regulations and generally recognised technical directives and conventions (standards, VDE regulations, technical regulations of other European Union member states or countries that are signatories to the treaty that established the European Economic Area). This expertise allows him to assess the condition of industrial trucks in terms of health and safety

Drivers

This truck may only be driven by suitable persons who are at least 18 years of age, have been trained in driving, have demonstrated their skills in driving and handling loads, and have been specifically designated to drive the truck. Specific knowledge of the truck is also necessary.

Driver rights,duties and rules of behaviour

The driver must be duly informed of his rights and duties.

The driver must be granted the required rights.

The driver must wear protective equipment (protection suit, safety helmet, industrial goggles and protective gloves) that is appropriate for the conditions, the task and the load to be lifted. The driver must also wear safety footwear to be able to drive and brake in complete safety.

The driver must be familiar with the operating instructions and have access to them at all times.

The driver must:

- Have read and understood the operating instructions
- Have familiarised himself with safe operation of the truck
- Be physically and mentally able to drive the truck safely

⚠ DANGER

The use of drugs, alcohol or medications that affect reactions impair the ability to drive the truck.

Individuals under the influence of the above-mentioned substances are not permitted to perform work of any kind on or with the truck.

Prohibition of use by unauthorised persons

The driver is responsible for the truck during working hours. He must not allow unauthorised persons to operate the truck.

When leaving the truck, the driver must secure it against unauthorised use.

Safety tests

Regular safety inspection of the truck

Safety inspection based on time and extraordinary incidents ▷

The operating company (see chapter entitled "Definition of responsible persons") must ensure that the truck is checked by a specialist at least once a year or after noteworthy incidents.

As part of this inspection:

- A full check of the technical condition of the truck in terms of accident safety must be performed
- The truck must be thoroughly checked to detect any damage that may have been caused by improper use
- A test log must be created.

The results of the inspection must be retained until at least a further two inspections have been carried out.

The inspection date is indicated by an adhesive label on the truck.

– Arrange for the service centre to perform periodic safety inspections on the truck.

– Observe the guidelines for tests carried out on the truck in accordance with FEM 4.004.

The operator is responsible for ensuring that any defects are remedied immediately.

– Contact your service centre.

0000_003-001_V3

NOTE

Observe the regulations in force in your country.

3

Overviews

Overview

Truck overview

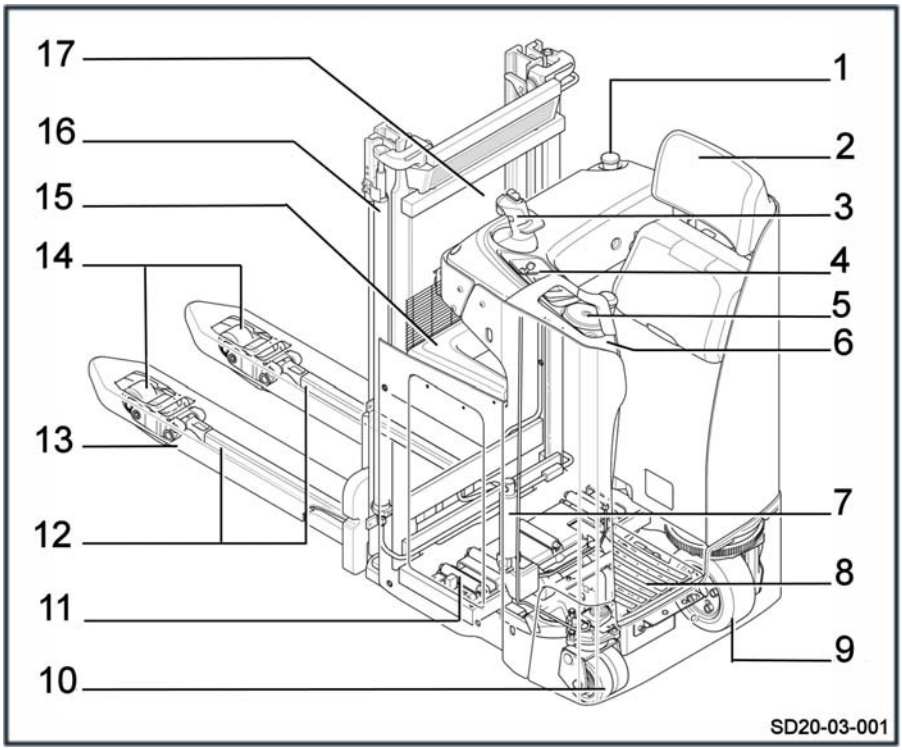

1	Emergency off switch	9	Drive wheel
2	Backrest	10	Stabiliser wheel
3	Control unit	11	Battery compartment
4	Switch key or electronic key and display block	12	Push rods
5	Steering wheel	13	Forks
6	Handle for climbing on and off	14	Load wheels
7	Lift cylinder	15	Hood
8	Platform	16	Mast
		17	Guard grille

General view of the technical compartment

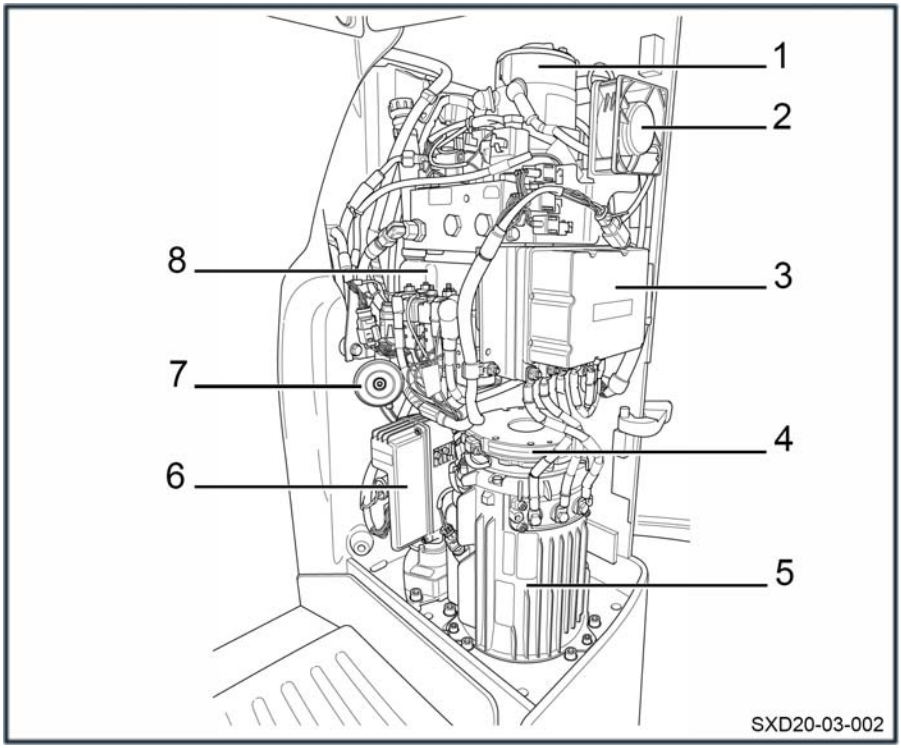

1	Pump-motor unit	5	Traction motor
2	Fan	6	Electric steering unit ES30-24
3	Controller	7	Horn
4	Electromagnetic brake	8	Tank

Control and display elements

Dashboard elements

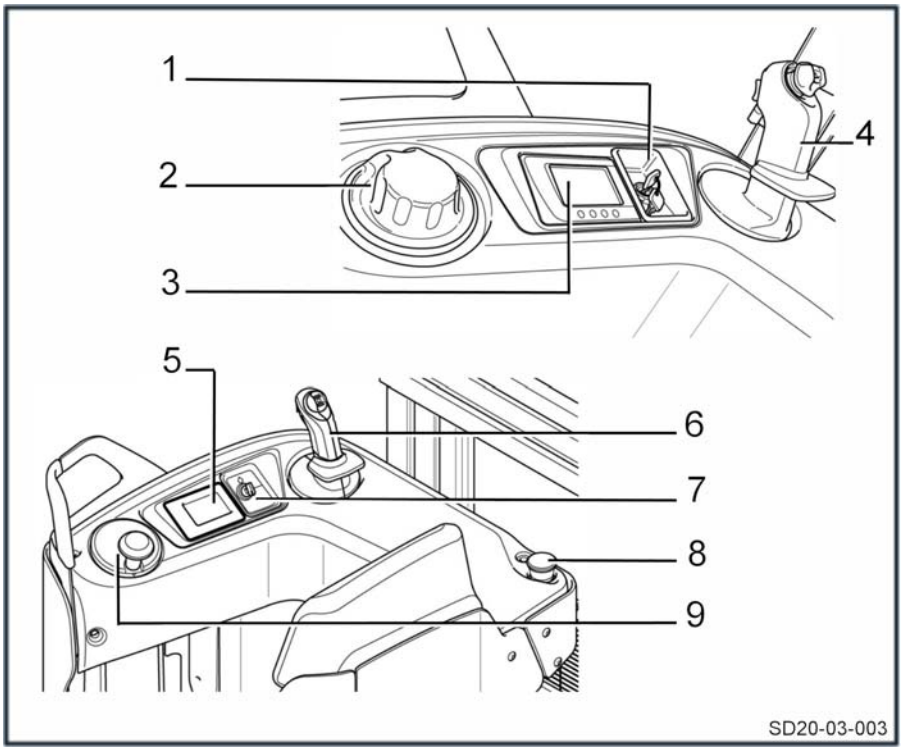

1	Switch key (or electronic key)	6	Control unit
2	Control button (Steering Knob device)	7	Switch key (or electronic key)
3	Display	8	Emergency off switch
4	Control unit	9	Steering wheel
5	Display		

Electronic key (option)

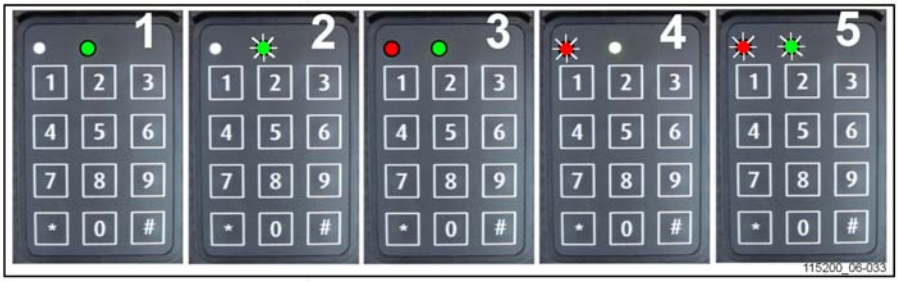

1 Switch ON (operating mode)
2 Switch OFF and awaiting code
3 Programming mode active
4 Key fault or incorrect code
5 Time delay of automatic switch-off

Operation	Enter	Status of LEDs	Comments
USE			
ON	* 1 2 3 4 5 # (by default)	○ red off ● continuous green (1) (correct PIN) ● red flashing ○ green off (4) (incorrect PIN)	1 2 3 4 5 default PIN
OFF	# (3 seconds)	○ red off ● green flashing (2)	Truck power off

PROGRAMMING (truck switch OFF only (2))			
ADMINISTRATOR CODE ESSENTIAL FOR ALL ELECTRONIC KEY SETTINGS	* 0 0 0 0 0 0 0 0 # (by default)	● continuous red ● continuous green (3)	Once the LEDs have gone out, the electronic key automatically reverts to "operating mode".
New operator code	* 0 * 4 5 6 7 8 #	○ red off ● green flashing (2) (code accepted)	Example of new operator code: 45678
Allocating operator codes	* 2 * 5 4 3 2 1 #	○ red off ● green flashing (2) (code accepted)	*2*: operator reference 10 options from 0 to 9
Deleting operator codes	* 2 * #	○ red off ● green flashing (2) (deletion accepted)	*2*: operator reference (between 0 and 9)
Modifying administrator codes	* * 9 * 1 2 3 4 5 6 7 8 #	○ red off ● green flashing (2) (code accepted)	

PROGRAMMING (truck switch OFF only (2))			
Restoring the initial administrator code			To reactivate the default administrator code (00000000), please contact your agent or nearest dealer.
Activating the automatic switch-off	* * 2 * 1 #	● red flashing ● green flashing (5) (5 seconds before switch-off)	Power switches off automatically after 10 minutes (600 seconds by default) if the truck is not in use.
Setting the time delay of the automatic switch-off	* * 3 * 6 0 #	○ red off ● green flashing (2) (value accepted)	Example: automatically switches off after 1 minute (60 seconds) if not in use. Minimum setting = 10 seconds/maximum = 3000 seconds
Deactivating the automatic switch-off	* * 2 * 0 #	○ red off ● green flashing (2) (command accepted)	

Display operating unit

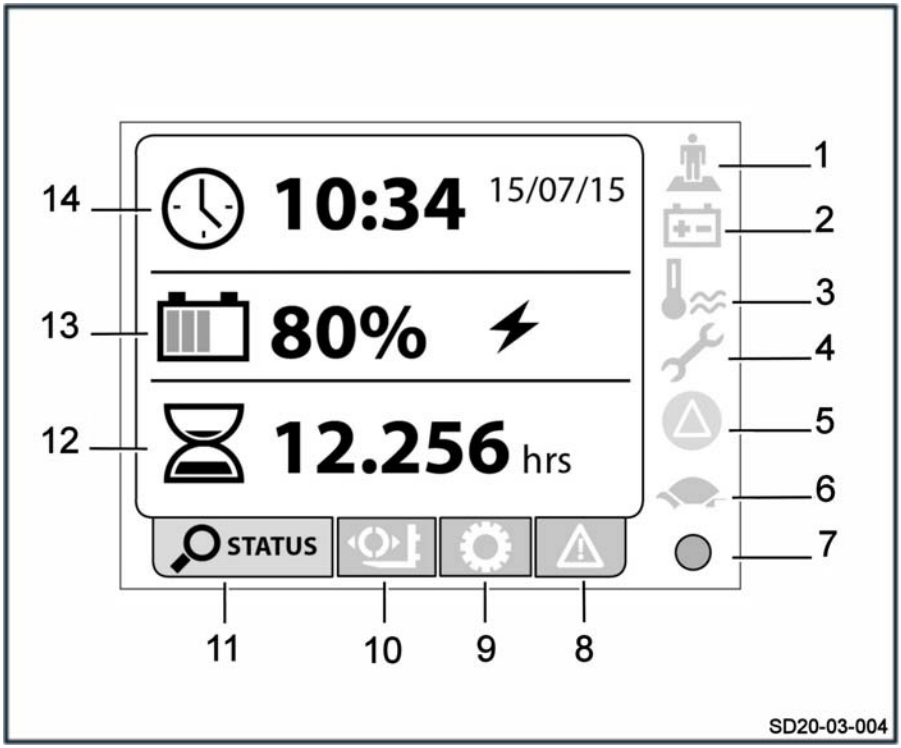

1	Operator presence indicator light
2	Battery indicator light
3	Temperature indicator light
4	Settings indicator light
5	Warning indicator light
6	Drive programme indicator light
7	Activity indicator light
8	Error Code menu
9	Settings menu
10	Load Management and Drive wheel position menu
11	Status menu
12	Display of the operating time of the truck
13	Display of the battery charge
14	Display of the date and time

For more information, refer to chapter 4 **Using the display operating unit**.

Markings

Location of markings

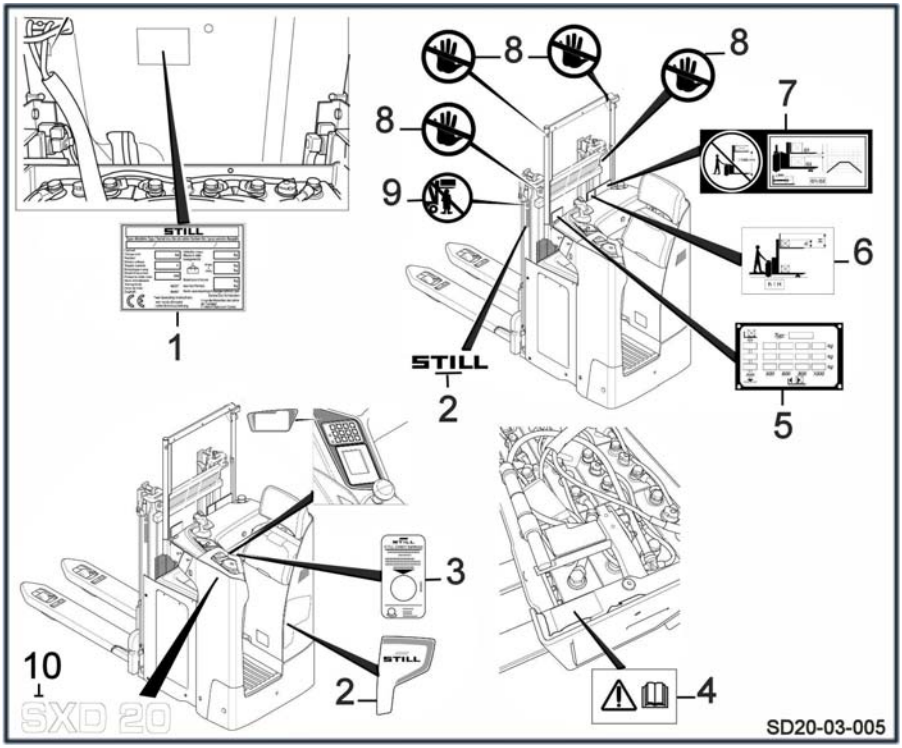

1	Identification label	6	Double pallet stacker label - loading/unloading
2	Brand label	7	Double pallet stacker label
3	Regular safety inspection of the truck label	8	Never touch with hands label
4	Danger instructions label Consult operating instructions	9	Mast safety label
5	Capacity label	10	Model label

Serial number

NOTE

Indicate the serial number for all technical enquiries.

The serial number contains the following information:

1 Production location

2 Type

3 Year of production

4 Count number

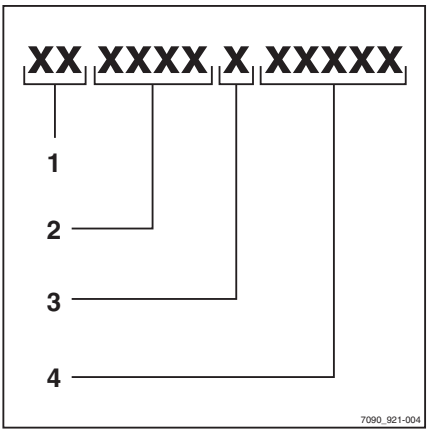

4

Use

Technical description

The SXD 20 double pallet stackers are intended for stacking and double stacking pallets and/or containers. They allow you to transfer loads from one place to another and to pick orders.

The following model is available:

- SXD 20

Capacity: 1200 kg in pallet stacker mode, 2000 kg in double pallet stacker mode (800 kg on the forks and 1200 kg on the load arms) and 2000 kg in pallet truck mode

Features

The ride-on double pallet stacker provides the operator with good visibility. The operator can cover long distances safely.

Speed during ride-on driving:

- **10 km/h** unladen
- **10 km/h** laden

Drive system

The truck drive system is provided by:

- 3,0 kW traction motor
- Microprocessor controller to control traction and lift
- Steering motor 0,185 kW
- Electric steering controller
- 2,2 kW pump unit

Batteries

Power is supplied by a lead battery with a capacity of 375 Ah or 500 Ah for side access batteries only.

Steering

The electric steering offers driving precision and easier manoeuvring.

The truck is equipped with a 0,185 kW asynchronous steering motor.

The steering is controlled by:

- A steering wheel and a control unit
- The Steering Knob device (notched button which allows you to position the wheel)

The drive unit is mounted on a turntable. Turning is provided by an electric geared motor that positions the turntable.

The steering motor is controlled by an impulse control system. This system receives information from the steering wheel and the wheel angle position.

The speed of the truck is automatically reduced when cornering.

Braking

The truck is equipped with an electromagnetic brake system.

See chapter **4** Use

Mast

The mast is lifted using the control on the control unit.

These masts are equipped with side lift cylinders.

These double pallet stackers are equipped with masts:

- S (standard) masts for heights ranging from 1574 to 2124 mm
- D (duplex) masts for heights ranging from 1574 to 2124 mm

Driver's compartment

The driver's compartment includes:

- A steering wheel and a control unit
- A switch key
- A display
- An emergency off switch
- An operator presence pedal
- A truck lifting/lowering support bar

Optional equipment available:

- Electronic key
- FleetManager™
- Steering wheel on the left or the right
- Control unit on the left or the right depending on the position of the steering wheel
- Control button (Steering Knob device)
- Cold store (-35°C)
- Terminal support
- Document holder support
- Roller support

List of checks prior to start-up

⚠ WARNING

Damage or other defects on the forklift truck or attachments (special equipment) can result in accidents.

If damage or other faults are noticed on the truck or attachments (special equipment) during the following inspections, do not use the truck until it has been properly repaired. Do not remove or disable the safety systems and switches. Do not change the pre-set values.

⚠ WARNING

Risk of falling!

When working on high-level parts of the truck, do not use truck components for access or to stand on.

– Use suitable access equipment.

Before start-up, ensure that the truck operates correctly.

To do this, perform the following checks:

– Fork arms or other load-carrying equipment should not show any signs of noticeable damage (for example: bending, cracks, significant wear).
– Check that there are no signs of leaking consumables under the truck.
– Do not restrict the field of vision. Ensure the visible area specified by the manufacturer is observed.
– Attachment parts (special equipment) must be properly secured and function according to their operating instructions.
– Damaged or missing stickers must be replaced in compliance with the marking position table.
– The guard grille must be intact and securely mounted.
– The roller guide rails must be coated in a visible layer of grease.
– The wheels must show no signs of defects or heavy wear. They must be mounted correctly.
– Check that there are no foreign objects that could hinder the operation of the wheels and rollers.
– The warning devices (horn etc.) must work.
– The battery cover must be closed.
– Check that the covers are correctly positioned.
– The chains must be in perfect condition and must be evenly and correctly tensioned.
– The operator must be qualified to drive the truck. The operator must be able to reach the controls and operate them (especially the anti-crush device). Do not obstruct access to the controls.

Please inform your supervisor if you notice any defects.

Checks and actions prior to commissioning

Start-up

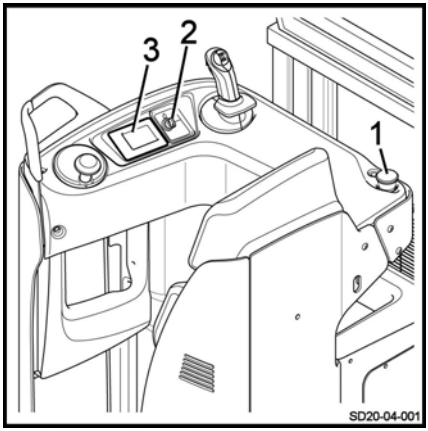

NOTE

Check that no commands are activated before switching on the truck.

- Check that the battery is connected and locked and that the hood is closed correctly.
- Enter the truck.
- Adjust the seat.
- Release the emergency off switch (1) if it has been pressed.
- Press the operator presence pedal.
- Turn the key (2). For models equipped with an electronic key, enter the 5-digit PIN code to start the truck.

The display (3) lights up. The truck is now ready for use.

Checking the emergency shutdown

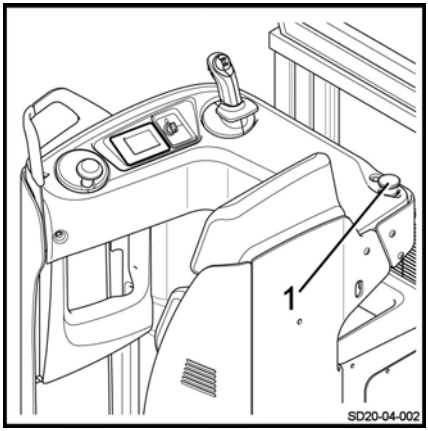

To check the operation of the emergency off switch, proceed as follows:

- Press the emergency off switch (1).

The power supply to the machine is cut off. The electrical controls and motors are no longer supplied with power. The electromagnetic brake is applied.

- Pull the emergency off switch (1). Enter the code or turn the switch key.

The functions are available again.

NOTE

Ensure the stabiliser wheels operate correctly. This influences braking effectiveness.

Checking the brakes

DANGER

Risk of accident.

If there is a brake system fault, do not use the truck. Report the malfunction to the manager.

Braking by reversing the drive direction ▷

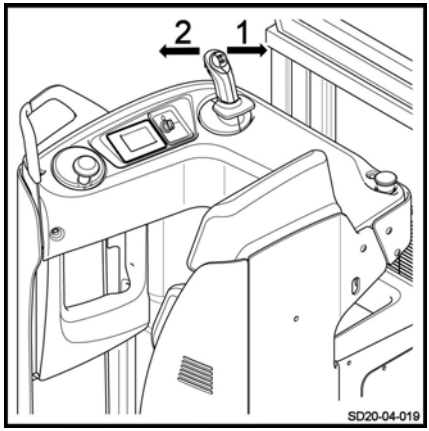

To check the brakes, proceed as follows:

– Accelerate the unladen truck in a clear area.

– Move the drive switch in the direction (1) or (2).

– While travelling, move the switch in the opposite direction.

First the truck is braked electrically.

– Release the drive switch.

The brake is automatically activated. The truck should slow down until it reaches a standstill.

Braking by releasing the drive switch

To check the brakes, proceed as follows:

– Accelerate the unladen truck in a clear area.

– While travelling, completely release the drive switch.

The brake is automatically activated. The truck should slow down until it reaches a standstill.

Checking the horn

To check the operation of the horn, proceed as follows:

– Press the horn (1).

The horn sounds.

▷

Truck operating instructions

The trucks are designed for indoor and outdoor use in non-hazardous atmospheres. The temperature should be between -10°C and +45°C and the relative humidity of the air less than 95%.

NOTE

A cold store option is available for lower temperatures.

The places where the truck is used must comply with the applicable regulations (condition of the ground, lighting etc.).

The trucks must be used on dry, clean and flat ground.

Before using the truck, it is essential to check the working environment. This check can take the form of visual inspection.

The work area must be clear. The truck's path must be free of obstacles and people.

The operator must be alert to anything that might prevent manoeuvres being carried out safely. The following may create a potential danger:

- A person near the truck
- A person below the forks when they are raised
- The operator must not use an MP3 player or any other electrical equipment that could impair awareness of his/her surroundings
- There must be no signs of oil or grease on the floor

The operator must take care when transporting a load. The load dimensions can interfere with manoeuvres and restrict the field of vision. The speed of the truck must also be reduced as the truck could tip over when breaking or cornering.

The loads must be consistent, with a maximum recommended height of 2 m.

For uses other than those shown above, please consult the After-Sales Service Centre.

It is important to use pallets that are in good condition.

Speed must be reduced when moving over obstacles to prevent the truck from becoming unbalanced and vibrations in the operator's arms.

The trucks can drive across ramps and shallow inclines. With an initial lift, they can cross larger obstacles.

WARNING

Risk of loss of stability

– Always adapt your driving to the ground conditions (uneven surfaces etc.), particularly hazardous working areas and the load.

NOTE

- *To prevent the bottom of the load lift system from scraping the ground, always move the forks to the raised position before setting off*
- *Always switch off the ignition before leaving the truck*
- *The mast protective screen must always be correctly positioned, properly secured and clean*

WARNING

Risk of damaging the truck

Ensure that the height of the mast is lower than obstacles (racks, doors etc.).

WARNING

Risk of injury

Always keep your hands on the controls. Never put your hands near moving parts and assemblies without first lowering the load arms to the ground and disconnecting the battery.

For effective protection, safety shoes must be worn.

Do not climb on the hoods of the truck (battery, chassis etc.).

⚠ WARNING

Driving safety guidelines:

- The driver must drive slowly around corners and when entering narrow passageways.
- The driver must always maintain a safe braking distance from vehicles or people in front of him.
- The driver must avoid stopping suddenly, making U-turns too quickly and overtaking in dangerous areas with poor visibility.

⚠ CAUTION

Risk of injury

Before using a side access truck, check that the battery is correctly locked.

Climbing on and off the truck

▷

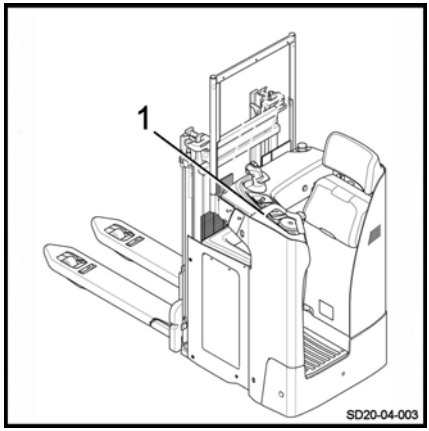

⚠ WARNING

Risk of falling, tripping or slipping when climbing on/off the truck.

– Hold the bar (1) when climbing on/off the truck.
– Pay attention to the step.

⚠ DANGER

Risk of injury

To avoid accidental start-up, do not use the control module as a handle. Please use the handle.

⚠ CAUTION

Risk of damaging the equipment.

– Never pull on the steering wheel or control unit when climbing onto the truck.

Excessive force on the steering wheel or the control unit can damage it and cause a malfunction.

Operator presence pedal

▷

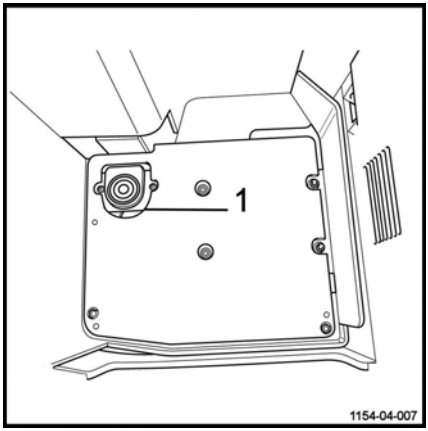

Pressing the operator presence pedal (1) enables the truck functions.

If the operator presence pedal (1) is released while the truck is moving, it brakes and slows to a stop.

Releasing the operator presence pedal (1) activates the parking brake.

DANGER

Risk of accident.

Do not keep the operator presence pedal pressed down with equipment or weights.

NOTE

Use your left foot to press the operator presence pedal.

Using the display operating unit

Selection buttons

The operator selects the menus using the four selection buttons:

- The **Blue Q** button (1) to select Blue Q mode, hare mode or tortoise mode
- The **left arrow** button (2) to scroll left through the drop-down menu
- The **right arrow** button (3) to scroll right through the drop-down menu
- The **confirm** button (4) to confirm the highlighted choice on the screen

Display of the drive wheel position

The forklift operator can find out the position of the drive wheel by referring to the display.

Proceed as follows:

– Press the **left arrow** or **right arrow** button to scroll through the menu.

– Select the Wheel menu (2).

– Press the **confirm** button (1).

The position of the drive wheel is then shown on the display (3).

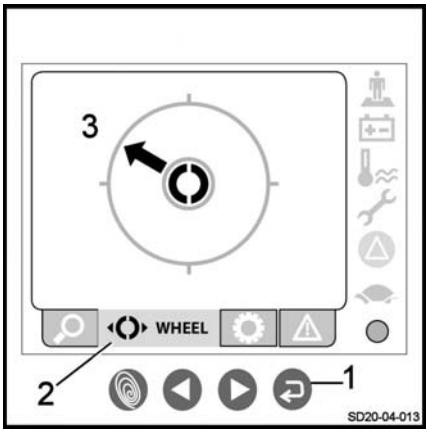

Operation of the display unit

Operator present

The **Operator present**(1) indicator light comes on when the operator steps onto the detection platform.

It switches off immediately afterwards.

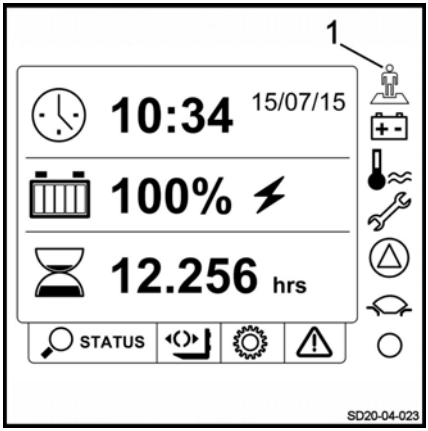

Managing battery charging

The operating unit shows the battery charge level.

The operator can refer to the battery icon (1) or (2).

The number of bars shown indicates the battery charge level.

- From 0 to 20%: 1 bar
- From 21 to 40%: 2 bars
- From 41 to 60 %: 3 bars
- From 61 to 80 %: 4 bars
- From 81 to 100 %: 5 bars

The **Battery** indicator light (3) comes on in the event of a deep discharge of the battery or in the event of a fault.

Two distinct warnings may be displayed if the battery charge is insufficient:

- 1) Less than 25% of charge remaining: The (3) and (4) icons flash and an audible beep sounds. A warning message appears at the icon (4) and remains on until the battery is recharged.
- 2) Less than 20% of charge remaining: Three regular beeps sound, lifting is restricted, the (3) icon flashes and the (4) icon

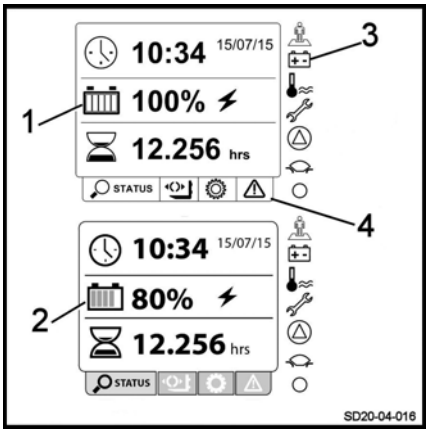

remains illuminated with a new warning message

Temperature, Settings and Warning lights

The **temperature** indicator light (1) comes on in the event of overheating of the traction motor or the controller.

A warning is shown on the display.

The **settings** indicator light (2) comes on to indicate the date of the next maintenance.

A warning is shown on the display.

The **warning** indicator light (3) comes on in the event of a fault in a truck component.

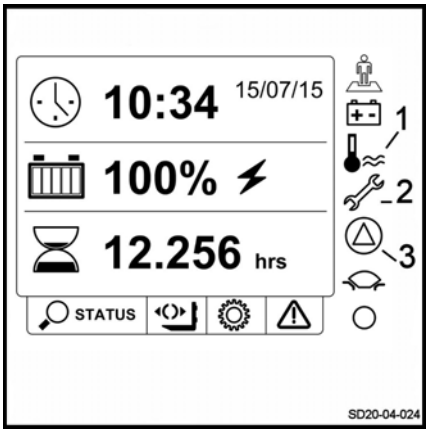

Drive programme

The **drive programme** indicator light (1) is permanently illuminated when a travel mode is selected.

There are three different drive modes:

- Tortoise mode (2)
- Hare mode (3)
- Blue-Q mode (4)

The icon of the drive mode selected appears on the display.

– Select the desired drive mode using the navigation keys.

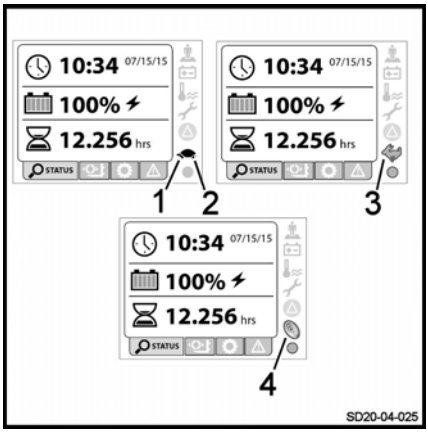

Activity indicator

The **activity indicator** indicator light (1) flashes continuously while the truck is in operation.

When the indicator is off, the display unit is locked or frozen. A warning is shown on the display.

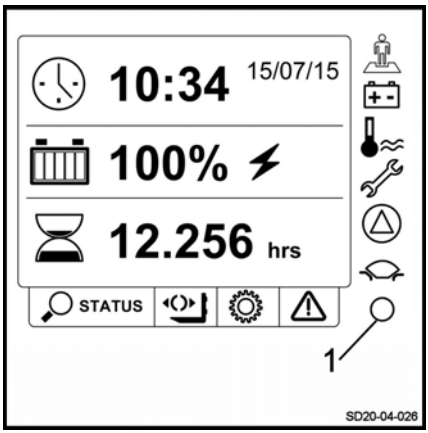

Settings menu

It is possible to access different settings through the Settings menu.

– Select the **settings** menu (1)

This menu allows access to a drop-down menu (2) consisting of:

- Language
- Unit
- Date format
- Date
- Time
- Adjust the Load Management warning sounds
- Adjust the contrast
- Adjust the brightness

– Select the desired choice.

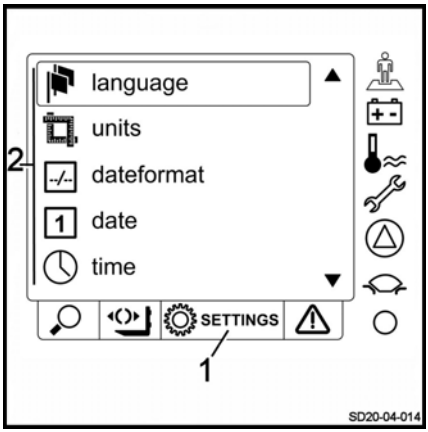

Error codes menu

It is possible to access the error messages that disrupt the truck's operation.

– Select the **error messages** menu (1)

The operator has access to the error codes. If several codes are affecting the truck, the operator can scroll through several successive displays.

The number of error messages is indicated at the bottom of the display (2).

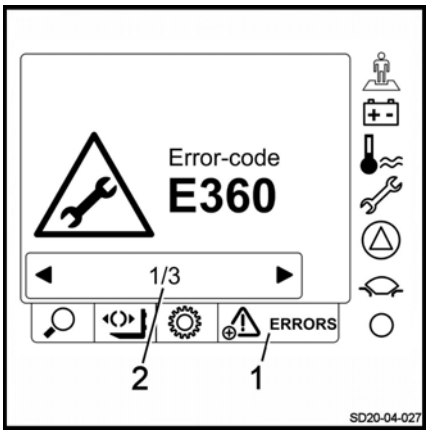

The start-up screen

In addition to the various menus and lights mentioned above, additional data is available:

- The **truck status** menu (1) displays the truck menu
- The **hourglass** icon (2) indicates the operating time of the truck
- The **clock** icon (3) indicates the time and date

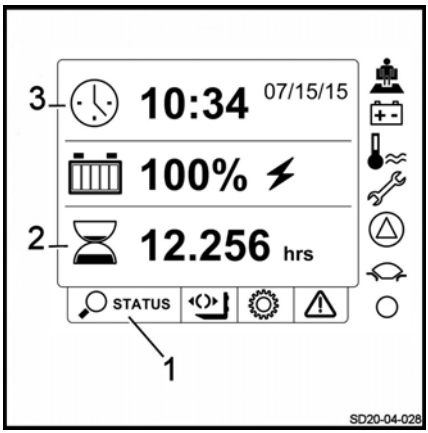

Driving safety guidelines

Behaviour when driving

Operators must obey the same rules within the plant as on the road. They must drive at speeds appropriate for the driving conditions.

Therefore, they must drive slowly:

- When cornering
- Through narrow passageways
- Through swing doors
- In low-visibility areas
- When the roadway is uneven

Operators must always maintain a safe braking distance from vehicles or people in front of them. They must always maintain control of the truck. They must avoid sudden stops, making fast U-turns, overtaking other vehicles in potentially hazardous or low-visibility areas.

Driving the truck while sitting on the dashboard is prohibited. The operator must be resting against the seat.

These trucks are designed to be used as a pallet stacker, double pallet stacker and pallet truck. Therefore:

- Never sit on the dashboard to drive the truck
- The truck must not be used as a stepladder
- The truck is not designed to transport people
- Operators must always stay within the truck clearance
- Stay in the safety area (working area defined by the manufacturer)
- Ensure the stability of the truck and do not exceed its capacity

Use of a telephone or radio with the truck is permitted.

However, do not use these devices when driving as they may distract you.

Take a test drive on an open surface.

NOTE

Drivers must wear safety shoes that fit properly to be able to drive and brake in complete safety.

Driving

Definition of directions

On a ride-on double pallet stacker, the conventional directions for the drive direction are:

- Forward travel (2): Opposite to fork direction/Forklift operator direction
- Reverse travel (1): Fork direction

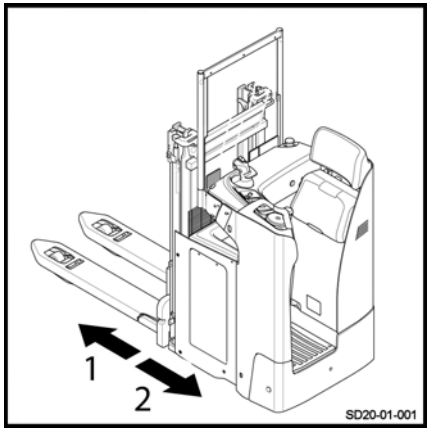

Start-up

NOTE

- *Check that no controls are activated before starting the truck*
- *Check that the battery hood is closed*
- *Check that the battery is locked*

– Check that the battery is connected.

– Check that the battery compartment hood is closed and locked correctly.

– Climb onto the truck using the handle.

– Press the operator presence pedal.

– Release the emergency off switch (1) if it has been pressed.

– Turn the key (2). For models equipped with an electronic key or the FleetManager™ option, enter the PIN code.

The display (3) lights up. The truck is ready for operation.

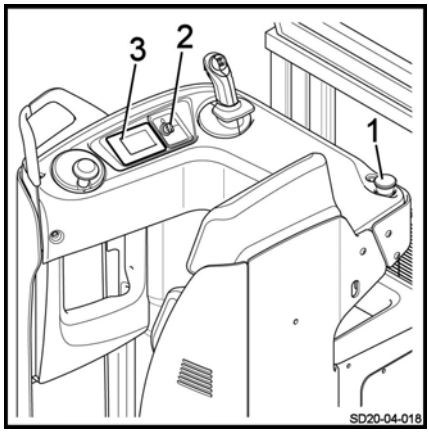

Driving

WARNING

Be aware of the position of the drive wheel

Slowly start the truck.

Check the position of the drive wheel on the display.

NOTE

Always operate the drive switch slowly, as the truck reacts immediately. Abrupt starts, braking or reversal of drive direction must be avoided at all costs.

The drive switch is located on the control unit.

NOTE

Always keep hands and feet inside the driver's compartment while the truck is moving.

Forward travel

▷

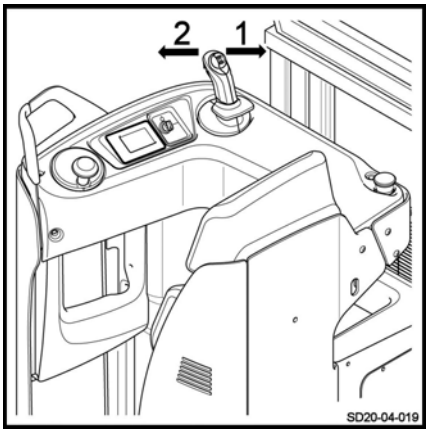

- Using your thumb, push the drive switch to the left (2) to travel forwards (opposite fork direction).
- When the drive switch is released, the truck brakes electrically.

Reverse travel

- Using your thumb, push the drive switch to the right (1) to travel backwards (fork direction).
- When the drive switch is released, the truck brakes electrically.

WARNING

Restricted visibility

During reverse travel, visibility may be restricted. Be very careful. Make sure that the path behind is clear before travelling backwards.

Reversing the drive direction

- Push the drive switch in direction (1) or (2).
- Release the drive switch.

– Operate it progressively in the opposite direction until the required speed is reached.

Braking

⚠ WARNING

The quality of the floor surface affects the braking distance of the truck.

This should be taken into consideration when driving.

Braking by reversing the drive direction

– Move the drive direction switches (2) or (3) in the opposite drive direction.

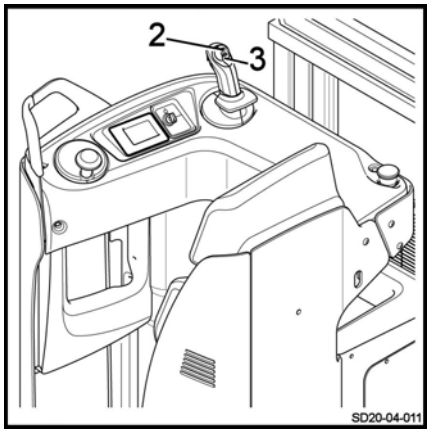

Braking by releasing the drive switch

– While travelling, completely release the drive switch.

The brake is automatically activated. The truck is immobilised.

Electromagnetic braking

The electromagnetic brake is activated automatically if one of the following conditions is met:

- The operator releases the operator presence pedal
- The drive switch is in the neutral position
- The power supply is cut off
- The operator presses the emergency off switch

Horn

The horn is positioned on the rear side of the control module.

It is used:

- On routes where there is poor visibility
- At junctions
- In the event of immediate danger

– Press the button (1) on the control module.

The horn sounds.

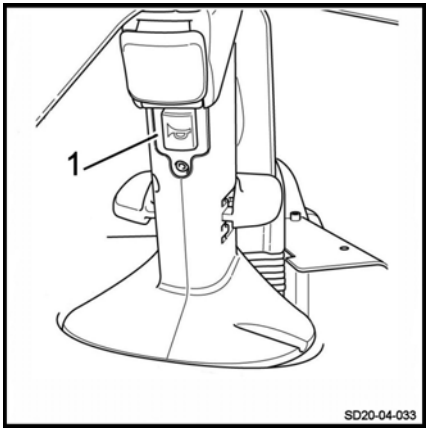

Drive program

The indicator light (1) is on during operation of the truck. The shape of the indicator light indicates the selected program.

The truck is equipped with three different drive programs:

- Hare mode (3)
- BlueQ mode (4)
- Tortoise mode (2)

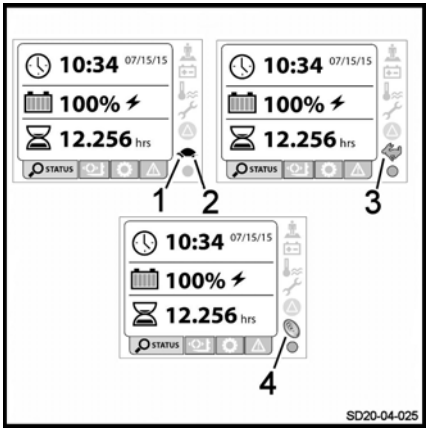

NOTE

When the operator restarts the truck, the last mode selected is automatically activated.

NOTE

The drive program is instantly changed. If the operator changes mode while driving the truck, he must remain vigilant.

Hare mode

When Hare mode is selected on the screen, the truck operates at its maximum performance.

Blue Q mode

Selecting Blue Q mode allows you to slightly reduce the performance of the truck:

- The travel speed of the truck is reduced (70% of maximum speed)
- The speed of lifting and lowering the forks is reduced (90% of maximum speed)

This mode allows you to save battery.

Tortoise mode

Selecting Tortoise mode allows you to reduce the performance of the truck:

- The travel speed of the truck is reduced to 6 km/h
- The speed of lifting and lowering the forks is considerably reduced

The different speeds can be adjusted. Contact the After-Sales Service Centre to change these.

Using the truck on a slope

NOTE

Incorrect use of the truck on a slope is not recommended. It places particular stress on the traction motor, brakes and battery.

Slopes must always be approached with great caution:

- Never attempt a slope whose gradient is greater than that specified in the truck's datasheet.
- Make sure that the ground is clean, has a non-slip surface and that the route is clear.

Travelling up slopes

Always travel up slopes in reverse. The load faces uphill.

Without a load, we recommend that you go up a slope forwards.

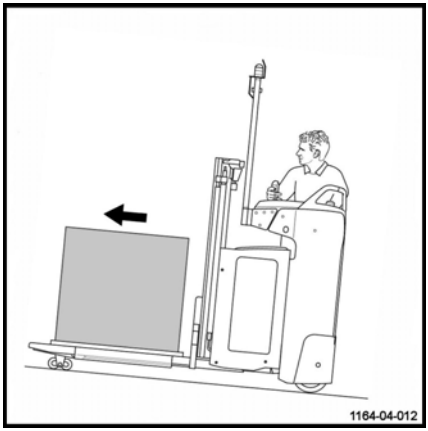

Travelling down slopes

Always travel down slopes forwards. The load faces uphill.

Without a load, we recommend that you go down a slope in reverse.

In all cases, you must travel at a very low speed and brake gradually.

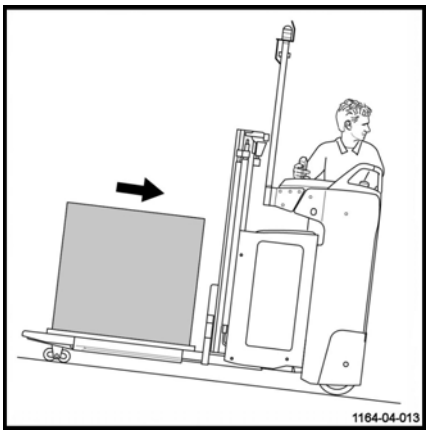

DANGER

Danger of death and/or risk of serious damage to equipment

Never park the truck on a slope. Never make a U-turn or take shortcuts on a slope.

On a slope, the operator must drive more slowly.

WARNING

Risk of serious injury and/or serious damage to equipment.

Driving on slopes steeper than 10% is prohibited due to braking capacity and stability. The load being transported could tip over.

Starting on a slope

Proceed as follows:

– Move the drive switch in the required direction.

– Release the drive switch to apply the parking brake.

Steering Knob option

▷

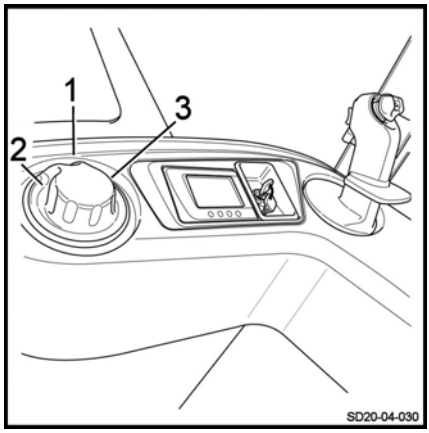

The Steering Knob device can replace the steering wheel controls.

⚠ WARNING

Risk of sharp truck movement

The Steering Knob device is highly sensitive. It is important to manipulate the turning knob with caution.

The turning knob allows you to adjust the position of the wheel. There is no need to reposition it when driving if the trajectory is straight.

When the button is positioned in the centre at the zero point (1), the truck travels in a straight line.

Two stops, one on the left (2) and one on the right (3), delimit the axis of rotation. The operator adjusts the turning knob within this axis to drive.

In forward travel (opposite direction to the forks)

– Move the turning knob to the left (anti-clockwise) (2) to turn to the left

– Move the turning knob to the right (clock-wise) (2) to turn to the right

In reverse travel (fork direction)

– Move the turning knob to the left (anti-clockwise) (2) to turn to the right

– Move the turning knob to the right (clock-wise) (2) to turn to the left

Operating the FleetManager™ option

Description of the FleetManager option

The FleetManager option allows you to control access to the truck. The option is a fleet management system.

You can access the system:

- Either by using a keypad
- Or by using a reading device for a transponder or an RFID card

The fleet manager sets the access details via the web interface. This affects the transponder cards or PIN codes for the corresponding trucks. It is possible to change the amount of time for which the access authorisation is valid.

Software is also available.

Additional options:

- Shock sensor
- Tools for wireless data management:
  - ▸ GSM[2]GPRS[1] module with antenna

The options available on the truck are:

- Access control
- Access control and shock sensor
- Access control and GPRS module
- Access control, shock sensor and GPRS module

[1] GPRS: General Packet Radio Service

[2] GSM: Global System for Mobile Communication

Shock sensor

This sensor allows you to record the shocks received by the truck.

If the truck receives a shock, it is possible to configure a speed reduction.

The fleet manager is the only person who is able to change certain parameters.

NOTE

Replace the sensor if it is faulty.

GSMGPRS module

The module consists of a GSM modem and an antenna.

The module allows you to:

- Access truck information remotely
- Use geolocation

The data is stored on a server.

Data is transmitted by Bluetooth (default) or by GSM module (optional).

Commissioning a truck equipped with the FleetManager™ option

Commissioning a truck equipped with a keypad or an electronic key ▷

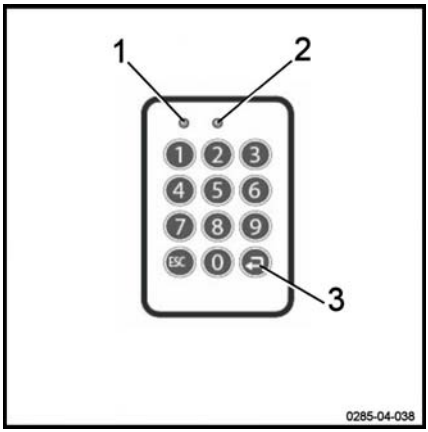

– Turn the switch key to start the truck.

– Enter the PIN code on the keypad. The PIN code consists of five to eight digits.

By default, no PIN code is given as a factory setting.

If the PIN code is correct, the LED (1) is not lit. The LED (2) flashes slowly at two-second intervals (green colour).

No acoustic signal sounds.

– Press the Enter key (3) to confirm.

The truck is now ready for use.

NOTE

In the configuration, the fleet manager can specify that the operator must enter a preliminary code when logging in. The operator can then assess the state of the truck.

Commissioning a truck equipped with an RFID reading device ▷

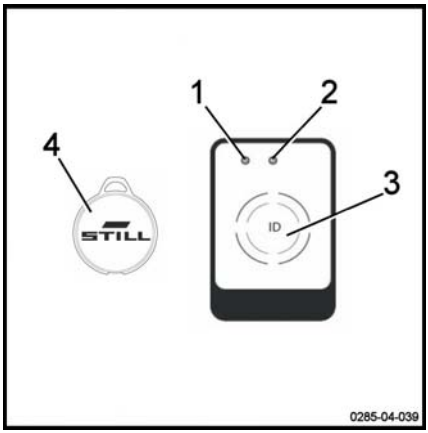

– Turn the switch key to start the truck.

– Place the RFID transponder card or the RFID transponder (4) in front of the reading device (3).

If the card is correct, the LED (1) is not lit. The LED (2) flashes slowly at two-second intervals (green colour).

Two acoustic signals sound.

The truck is now ready for use.

FleetManager™ option: Colour code for the LEDs

The LEDs can have different statuses and different colours. Below is the list of the most common messages and their meanings.

Malfunction			Cause	Solution
LED status		Signal transmitter		
LED 1	LED 2			
Lit continuously Red colour	Off	A long acoustic signal sounds	**Reading device variant:** no valid access authorisation	Generate a valid access authorisation using the interface
			Keypad variant: no valid access authorisation for the PIN code entered	
			Keypad variant: PIN code entered incorrect or not confirmed using the Enter key	Re-enter the PIN code
Lit continuously Red colour	Flashes once Green colour	A long acoustic signal sounds	The operator has been granted access authorisation. But the period of validity has expired.	Use the interface to enter a new period of validity
			The date of the truck is incorrect	Update the date of the truck
Flashes quickly Yellow colour	Lit continuously Green colour		Memory is 80% full	Clear the memory
Flashes quickly Red colour	Flashes quickly Red colour	A long acoustic signal sounds upon activation	There are several possible causes: - Reading device or keypad not accessible - GPRS module not accessible - Built-in rechargeable battery flat - Memory full	Contact the After-Sales Service Centre

Malfunction			Cause	Solution
LED status		Signal transmitter		
LED 1	LED 2			
Flashes quickly Red colour	Lit continuously Green colour		A shock has occurred	Reset the shock
Flashes quickly Blue colour	Off		The truck is connected via a Bluetooth link. The operating data is being read. The reading process can take up to five minutes.	The truck is switched on but is not moving. Wait for all of the relevant data to be read. As soon as the LEDs change to a different status, resume work.

Disconnecting a truck equipped with the FleetManager™ option

NOTE

Operators must not log off intentionally while driving.

WARNING

Access to the truck must be disabled.

Unauthorised users are not allowed to use the truck.

Disconnecting a truck equipped with a keypad or electronic key

▷

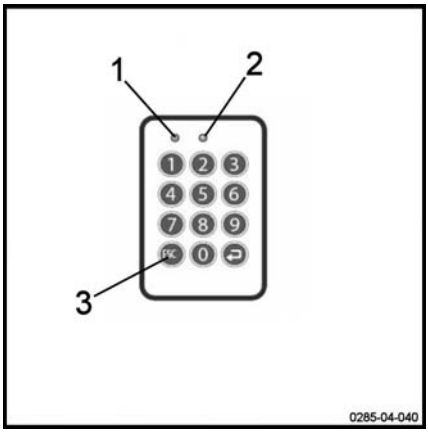

- Park the truck in a safe place.
- Press the button (3) to log off. Keep the button pressed in.

No LEDs light up. A long acoustic signal sounds.

The LED (1) lights up for a second (red colour). The LED (2) is not lit. A long acoustic signal sounds.

The LED (1) is no longer lit. The LED (2) flashes slowly at two-second intervals (green colour). No acoustic signal sounds.

The truck is disabled.

- Turn the switch key to the off position to switch the truck off completely.

Disconnecting a truck equipped with an RFID reading device ▷

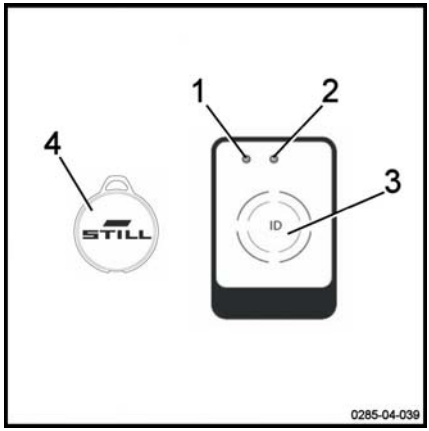

– Park the truck in a safe place.

– Briefly place the RFID card or the RFID transponder (4) in front of the reading device (3).

The LED (1) lights up for a second (red colour). The LED (2) is not lit. A long acoustic signal sounds.

The LED (1) is no longer lit. The LED (2) flashes slowly at two-second intervals (green colour). No acoustic signal sounds.

The truck is disabled.

– Turn the switch key to the off position to switch the truck off completely.

Transporting loads

Load handling safety rules

▷

⚠ WARNING

Carefully observe the following instructions before picking up loads. Never touch or stand on moving parts of the truck (e.g. lifting device, pushing devices, work installations or devices for picking up loads).

⚠ WARNING

Take care not to trap hands or feet when operating the truck.

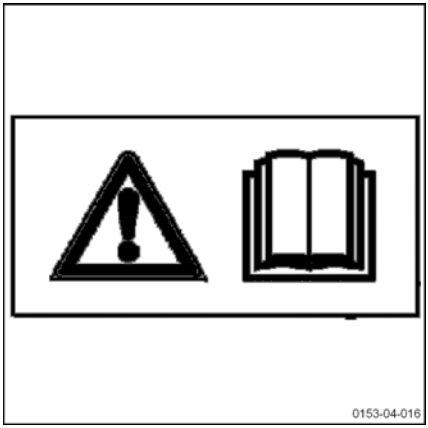

Grabbing a loading unit

▷

Watch out for the following elements:

- the load must be well-balanced and centred correctly between the fork arms
- the fork arms must be sufficiently slid underneath the load to guarantee stability.

The load must not protrude too far over the fork arms, nor should the fork arms protrude too far out from the load.

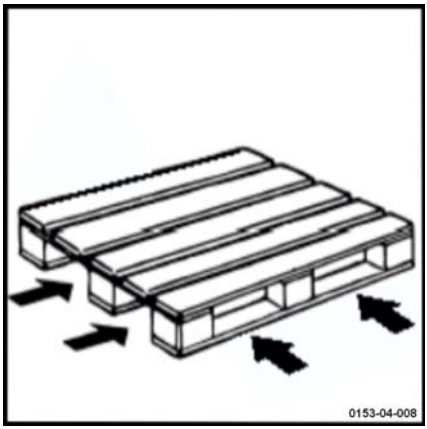

Transporting pallets or other containers ▷

As a general rule, loading units must be transported one by one (e.g. pallets). Transporting several loading units at a time is only authorised:

- when the safety preconditions are fulfilled.
- by order of the monitoring agent.

The forklift operator must ensure that the loading unit is properly packaged. He must only move loading units that have been carefully prepared and that meet the safety requirements.

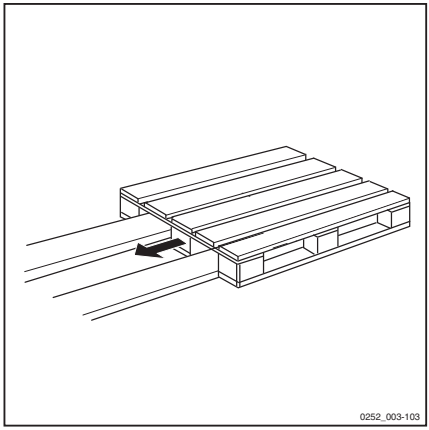

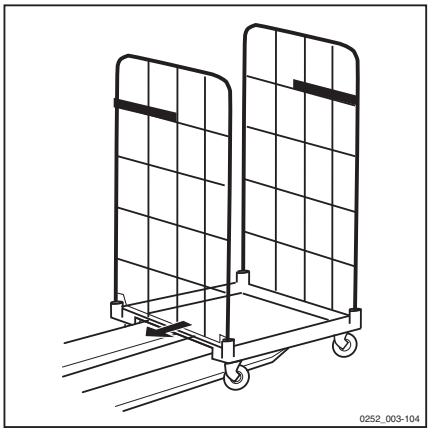

Lift control elements

⚠ WARNING

Risk of injury

The safety instructions must be strictly adhered to.

Do not touch or stand on moving parts (e.g. lifting device, pushing devices, work installations, load lifting devices).

⚠ CAUTION

Risk of the load swinging and loss of stability

Do not drive with a load in the raised position without load on the load arms. The high load must be lowered as close as possible to the load in the low position. The forklift operator must lower the forks again before moving the truck.

The truck has two lift systems:

Main lift

▷

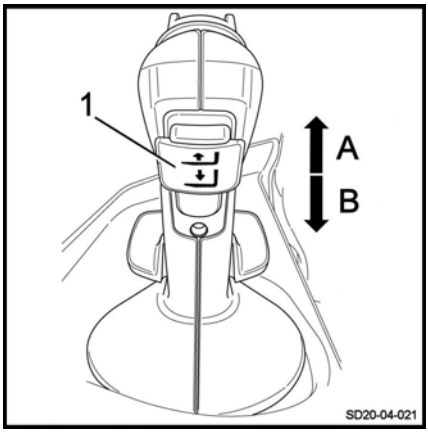

Lifting the fork arms

– Start the truck.

– Push the fork lifting control (1) upwards (A).

The fork arms are raised.

Lowering the fork arms

– Pull the fork lowering control (1) downwards (B).

The fork arms are lowered.

When the lifting control (1) is released, the forks stabilise at the required height.

NOTE

The speed of lifting and lowering movements is determined by the degree to which the control (1) is moved. It automatically returns to neutral position when it is released.

⚠ CAUTION

Lifting and lowering the forks

Always use this control (1) gently without jerking.

Base lift

Lifting the load arms

– Pull the control (2) downwards (D).

The load arms are raised.

Lowering the load arms

– Push the control (2) upwards (C).

The load arms are lowered.

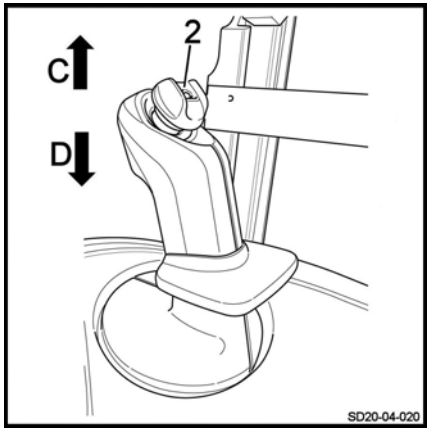

Progressive stopping of the carriage in the lower position

A detector (1) that senses when the position of the forks is 30 cm from the bottom part of the mast triggers an automatic slowing of the lowering action. This detector prevents a violent impact at the end of travel.

– Push the fork lowering control until the carriage is fully lowered.

The progressive shutoff device for the carriage prevents the buffer from being hit at the end of travel.

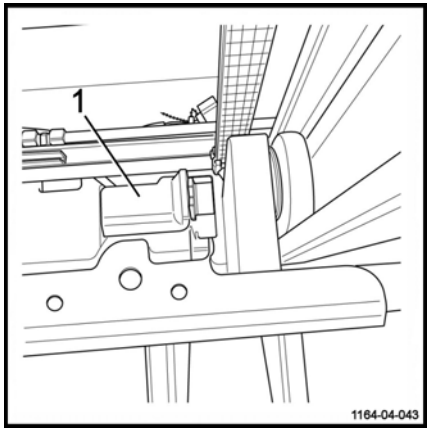

Reading the capacity label

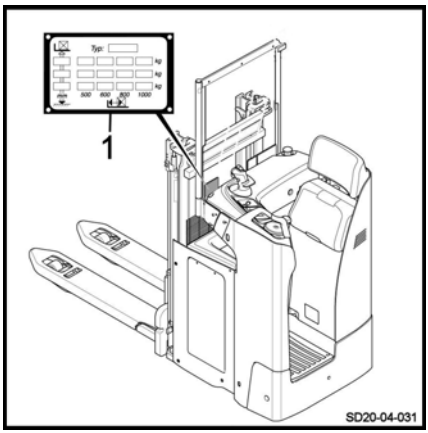

CAUTION

Risk of loss of control

Before picking up a load, make sure that its weight does not exceed the lifting capacity of the machine.

Refer to the nominal capacity specified on the truck's capacity label (1).

The values shown correspond to compact, homogeneous loads. They must not be exceeded. If they are exceeded, the stability of the truck and the resistance of the mast and the chassis are no longer guaranteed.

The distance of the load centre of gravity from the back of the fork and the lift height determine the maximum load weight. Check that the pallet is in good condition.

SXD-20 capacity

In pallet truck mode: 2000 kg

In pallet stacker mode: 1200 kg

In double pallet stacker mode: 800 kg on the forks (main lift) and 1200 kg on the load arms (initial lift)

Reading the capacity label

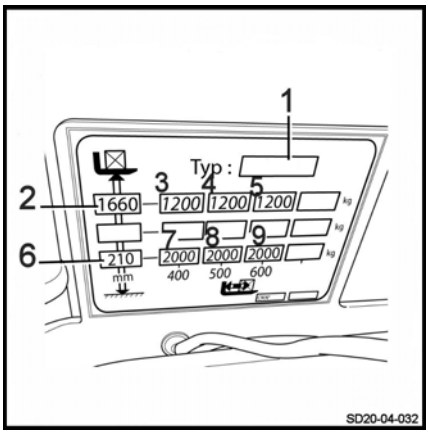

Example for a truck equipped with a 1574-mm mast and initial lift:

- 1: Model: SXD-20
- 2: Maximum lift height: 1660 mm
- 3: Maximum mast capacity: 1200 kg with a height of 1660 mm (centre of gravity 400 mm)
- 4: Maximum mast capacity: 1200 kg with a height of 1660 mm (centre of gravity 500 mm)
- 5: Maximum mast capacity: 1200 kg with a height of 1660 mm (centre of gravity 600 mm)
- 6: Maximum lift height: 210 mm with 2000 kg in pallet truck mode
- 7 to 9: Maximum capacity in pallet truck mode: 1800 kg with a height of 210 mm

Handling a single load

DANGER

Risk of truck falling

Do not stack the initial lift high.

Before picking up a load

Ensure that the load weight does not exceed the truck's capacity.

- Refer to the nominal capacity specified on the truck's capacity label
- You must also make sure that the load is stable, well-balanced, attached firmly and centred between the fork arms in order to avoid dropping any part of the load
- Check that the width of the load is compatible with the width of the fork arms
- Check that the load is not damaged

CAUTION

Risk of injury

Safety shoes must be worn.

Transporting people is strictly prohibited.

DANGER

Risk of tipping

It is essential to slow down when approaching a corner or on wet surfaces.

CAUTION

Arrangement of loads

Do not touch nearby loads or loads positioned at the side or in front of the load being handled.

Arrange the loads with a small space between them to prevent them coming into contact with one another.

DANGER

Risk of crushing fingers, hands and arms

Do not put your hands above the mast protector.
Do not disassemble the mast protection.

Picking up a load from the ground

– Use the initial lift to raise a load of up to 2000 kg several centimetres from the ground.

Transporting a load

▷

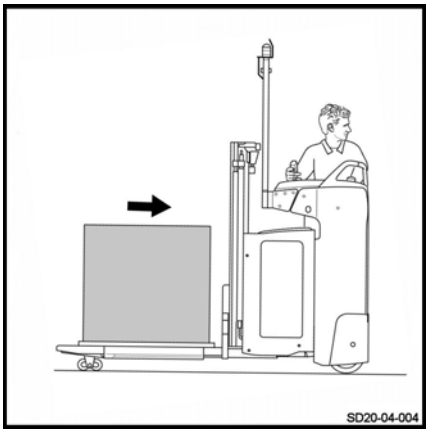

⚠ DANGER

Risk of accident

No one should be under or near the truck when the load is in the raised position.

⚠ DANGER

Risk of falling

Never transport a load with the forks in the raised position as the truck may become unstable.

Observe the following recommendations:

- Always drive forwards for optimum visibility
- Always travel up or down slopes with the load uphill Never travel across the slope or make a U-turn
- Reverse travel is used for depositing the load As visibility in reverse travel is restricted, drive at creep speed
- Never drive with an unstable load
- If visibility is poor, let someone guide you
- Be careful of low passageways, low doorways, scaffolding, pipes, etc.
- To move past obstacles, slightly raise the forks
- Check that the width of the load is not greater than the width of the aisle

Setting a load down on the ground

Proceed as follows:

– Drive the machine to the required location.

– Carefully move the load into the unloading area.

– Lower the load until the forks are freed.

– Withdraw the machine in a straight line.

– Raise the forks a few centimetres.

⚠ CAUTION

Risk of falling

Do not touch nearby loads or loads positioned behind the truck.

⚠ CAUTION

Risk of accident

Before you remove the load, ensure that no one is around the truck or load.

Stacking a load

▷

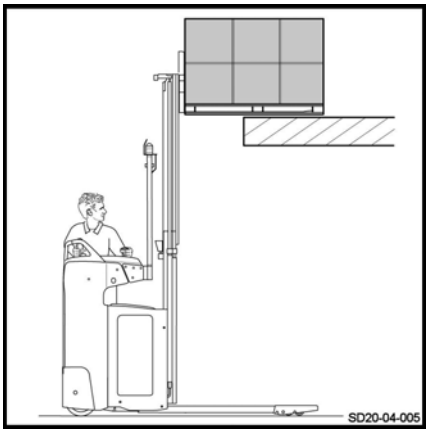

⚠ DANGER

Risk of loss of stability

Do not use the initial lift control to disengage the load from the storage area, in order to retain maximum stability and to avoid any risk of overloading the truck.

Proceed as follows:

- Drive the machine to the required location.
- Lower the load arms completely.
- Raise the forks clearly above the level where the load is to be placed.
- Drive the truck forward into the storage area.
- Lower the load until the forks are freed.
- Withdraw the machine in a straight line.
- Lower the forks again to several centimetres from the ground.

⚠ DANGER

Risk of fatal accident!

No one should be under or near the truck when the load is in the raised position.

Picking up a load at a height

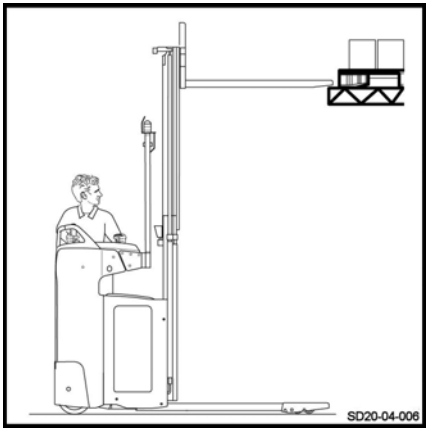

Proceed as follows:

- Drive the machine to the required location.
- Lower the load arms completely.
- Lift the forks to the height of the pallet.
- Carefully move the forks forward under the pallet.
- Lift the forks until the pallet is lifted free of the storage area.
- Reverse the truck slowly to move the pallet.
- Lower the forks again with the load to the ground.
- Lift the load arms to move the truck.

Before leaving the machine

NOTE

Always stop the machine on level ground away from traffic routes.

Proceed as follows:

- Lower the forks to the low position.
- Switch off the ignition (key or electronic key).
- In the event of a prolonged standstill, press the emergency off switch. Then disconnect the battery.

Handling two stacked pallets

Double pallet stackers enable two stacked loads to be transported:

- One load on the load arms (initial lift).

- One load on the fork arms.

⚠ DANGER

Risk of loss of stability

The overall weight of the two loads must not exceed the maximum capacity of the machine (refer to the capacity plate).

The heavier load must be placed on the load arms.

Picking up two loads

▷

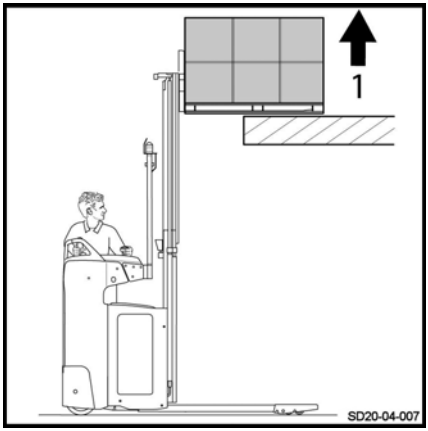

– Lower the load arms.

– Raise the forks to the correct height to load the upper pallet.

– Carefully move the forks forward under the pallet.

– Raise the forks (1) to lift the upper load.

– Reverse the truck slowly in a straight line to withdraw the first load.

– Lower the forks to move the truck.

– Lift the forks back to a suitable height (to avoid all obstacles).

– Carefully move forward in order to go and get the second load.

– Raise the load arms (2) to lift the load from the ground.

– Lower load (Q1) again as close as possible to load (Q2) before driving.

⚠ CAUTION

Risk of crushing goods

Make sure that there is enough space above load (Q2) so as not to crush the top of the pallet.

– Reverse the truck slowly to remove the pallets from the storage area.

⚠ CAUTION

The total load (Q1) + (Q2) must not exceed 2000 kg. **Q1 must be less than Q2** (for details, read the double pallet stacker label in chapter 4: Capacity).

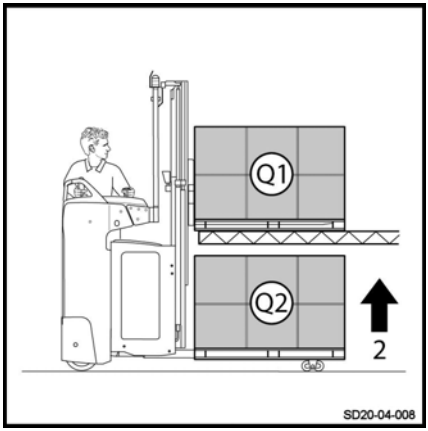

Transporting two loads

Observe the following recommendations:

- The normal direction of travel is forwards
- In the event of poor visibility, move slowly and carefully and work with guidance
- Do not travel with a load (Q1) on the forks if there is no load (Q2) on the load arms above 300 mm from the ground
- The heavier of the two loads (Q2) must be placed down on the load arms
- Keep the upper load (Q1) as close as possible to load (Q2) at all times

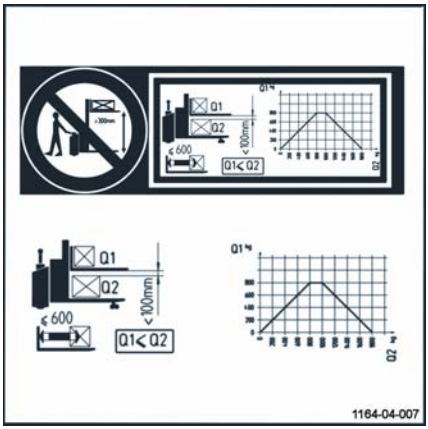

Setting down two loads

– Carefully move the truck to the desired area.

– Raise the forks clearly above the level where the load is to be placed.

– Slowly move the loads towards the storage area.

– First of all, place the lower pallet on the ground and then place the upper pallet on the first level.

– Slowly remove the truck in a straight line.

– Lower the forks again.

WARNING

Lifting and lowering the forks

The initial lift or lowering operation (load arms) is matched by the forks.

Before leaving the machine

CAUTION

Parking the truck

Always stop the machine on level ground away from traffic routes.

- Lower the forks (unladen) and the load arms to the lowered position.
- Turn off using the ignition key or the electronic key.
- In the event of a prolonged shutdown, press the emergency off switch and disconnect the battery.

Cold store usage (optional)

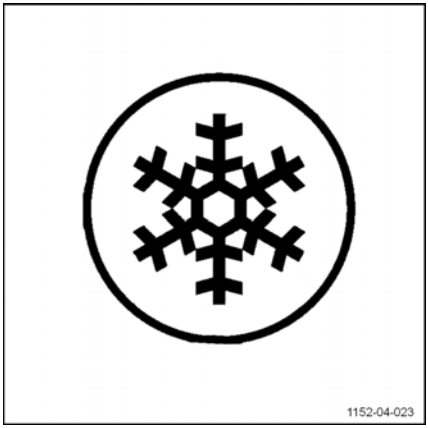

CAUTION

Standard trucks risk being subject to significant damage if used in extreme conditions.

Only trucks with the Cold Store option may be used inside cold storage. Specific oil designed for cold stores must be used.

These trucks are identified by their Cold Store label.

Area of Use

Trucks with the Cold Store option may be used in two different areas:

- **operating range 1**: the truck can operate at a temperature of -5 °C and, for short periods, at a temperature of -10 °C. It must be parked outside of the cold store.
- **operating range 2 (Entry / Exit applications)**: the truck must be used alternately inside and outside of the cold store. It can withstand temperatures between -30 °C and +45 °C. Specific rules should be followed so as not to damage the truck and to avoid the occurrence of streaming (see the following paragraph). The truck is parked outside of the cold store.

Precautions for Use

The difference in temperature between the cold store and the room temperature zone may result in the formation of condensation water.

This water can freeze when the truck goes back into the cold store and jam the moving parts of the truck.

Streaming occurs if the truck remains outside of the cold store for more than ten minutes. Therefore, it is essential to leave the truck outside of the cold store for 30 minutes so that the condensation disappears.

DANGER

If the condensation freezes in the cold store, it is prohibited to operate the jammed parts.

This could cause permanent damage to the truck.

Parking

The truck must be parked outside of the cold store.

Parking inside the cold store could cause serious damage to the electrical and mechanical equipment (seals, hoses, rubber and synthetic parts).

CAUTION

Do not leave discharged or unused batteries in the cold store.

They could be permanently damaged.

Parking the truck.

⚠ WARNING

Risk of injury

Never leave the truck with the load in the raised position.

Do not stop the truck on a slope. If absolutely necessary, secure the truck with wedges.

Stopping the truck

- Immobilise the truck.
- Lower the forks.
- Switch off the ignition (key or electronic key).
- Press the emergency off switch.

Restarting work

- Switch on the ignition again (key or electronic key).
- Press the operator presence pedal.
- Pull the emergency off switch.

Handling the battery

Battery type

Trucks can be fitted with different types of battery. Comply with the information indicated on your battery's type plate, as well as with its features.

WARNING

The weight and size of the battery influence the stability of the truck.

The new battery must weigh the same as the old one. Do not remove extra weight or change its position.

CAUTION

Be careful not to damage any wiring when replacing the battery.

Order picking

Maintenance personnel

The battery must be replaced by specially trained personnel. Personnel must follow the manufacturer's instructions for the battery, the charger and the truck.

It is also necessary to follow the battery maintenance instructions.

Fire protection measures

WARNING

Do not smoke or create a flame when handling batteries. There must be no combustible material or tools that produce sparks within a minimum radius of 2 m around the truck and the battery charger.

The work area must be well ventilated. Fire extinguishers must be provided and located near the work area.

Parking the truck securely

When the battery is being worked on, the truck must be parked safely. The truck can only be

restarted when the covers and connectors have been put back in the operating position.

Opening and closing the battery hood

Opening the battery hood

To open the battery hood:

- Immobilise the truck.
- Lower the forks.
- Switch off the ignition (key or electronic key).
- Press the emergency off switch.
- Lift the hood (1) using the handle designed for this purpose.

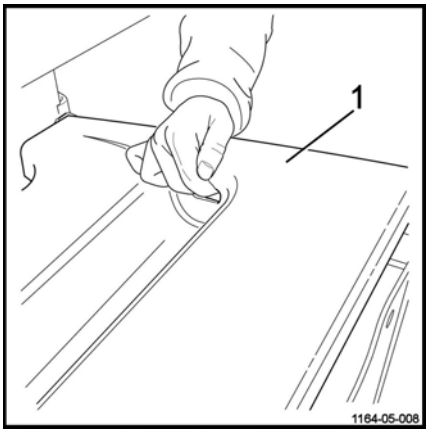

Closing the battery hood

To close the battery hood:

WARNING

Risk of trapping fingers

When closing the battery hood, correctly position your fingers to avoid any risk of them being trapped.

- Close the hood (1).
- Ensure that the battery hood is closed securely.

CAUTION

Risk of sparks

Never drive with the hood open or incorrectly closed.

Changing the side access battery

DANGER

Risk of trapping fingers.

It is advisable to wear gloves when changing the battery.

WARNING

Risk of injury

Safety shoes must be worn when changing the battery.

Before handling, ensure that there is nobody around the truck.

To remove the battery, we recommend that you use a fixed roller frame or a truck with extraction rollers (fitted with rollers) for easier handling of the battery.

To change the battery, proceed as follows:

- Immobilise the truck.
- Lower the forks.
- Switch off the ignition and remove the key.
- Press in the emergency off switch.
- Open the battery hood.
- Unclip the hood from the fixed screw (1). Place the hood on the forks. ▷
- Disconnect the battery connector located under the dashboard.
- Place the connector on the battery cells.

– Unlock the door that is not attached to the side of the battery by lifting the latch (1). Hold the door (2) to prevent it falling.

▷

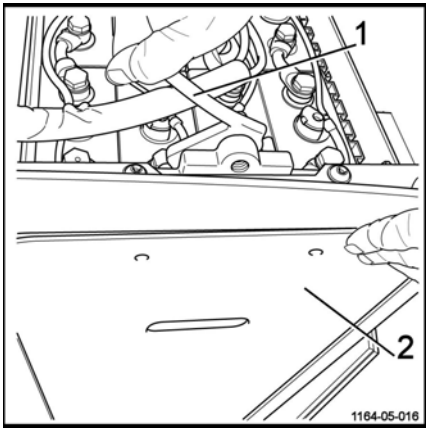

– Remove the door (2) (if this option is selected) and place it to one side.

– Position the truck with extraction rollers or the roller frame (4) in the upright position near the battery compartment on level ground.

▷

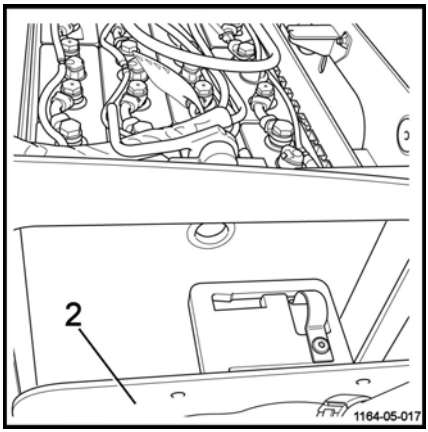

– Operate and pull the locking handle (2) in the direction indicated by the arrow. ▷

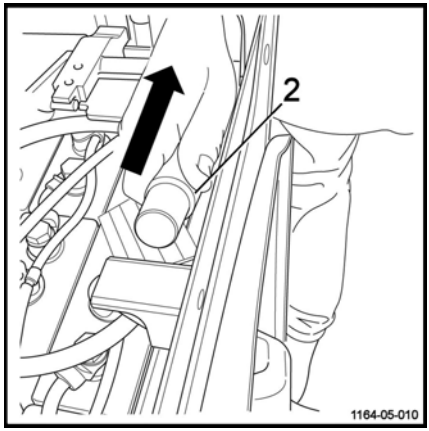

– Lift the locking bar (3) until the battery is freed. ▷

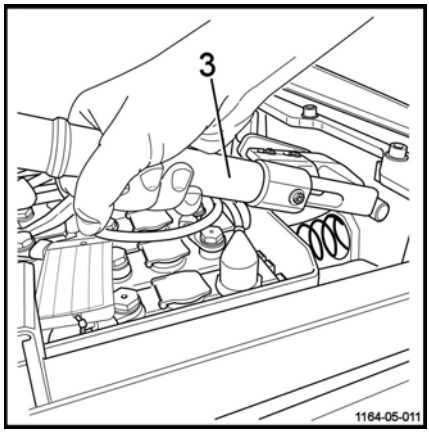

– Pull the battery onto the truck with extraction rollers or the roller frame. ▷

– Replace the battery. Remove the discharged battery and position a charged battery on the roller frame.

– Position the truck with extraction rollers or the roller frame (4) in the upright position next to the battery compartment.

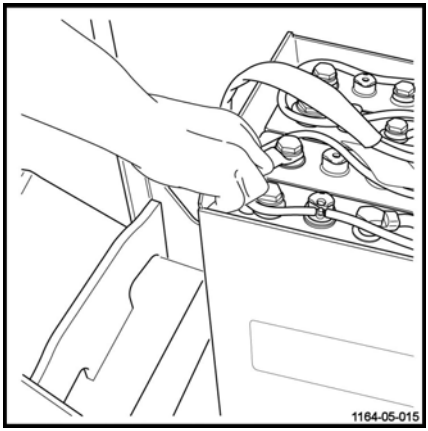

– Push the battery into the compartment. ▷

⚠ DANGER

Risk of trapping fingers.

Push the battery from the rear side (A) of the battery. Take care not to trap your fingers by pushing from the top or the side of the battery.

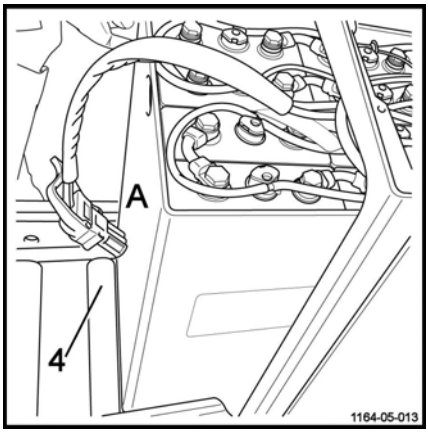

– Push until a click is heard. The battery is correctly installed. ▷

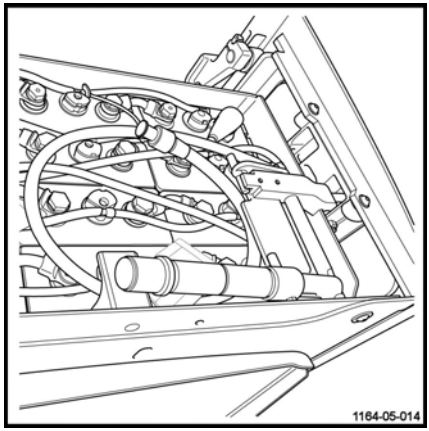

⚠ WARNING

Risk of injury

Ensure that the battery is in the end position and that the hook is correctly holding the battery.

⚠ DANGER

Risk of injury

The battery is correctly positioned but is not yet locked.

– Lower and lock the handle (2) of the locking bar (3) in the direction indicated by the arrow. The locking bar must be horizontal and must be right up against the stop (5). ▷

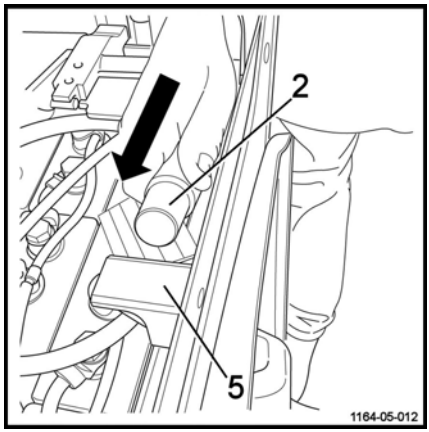

⚠ CAUTION

Risk of locking the battery incorrectly

The locking bar should not in any circumstances be positioned under or on top of the stop. It must be positioned against the stop.

– Reconnect the battery connector.

– Lower the latch of the battery compartment door (if this option is selected). The door that is not attached to the side of the battery must be correctly locked.

– Refit the battery hood.

– Return the truck to service.

⚠ WARNING

Risk of injury

Before restarting the truck, ensure that the battery is correctly installed. Check that the battery is locked and that the battery hood is closed.

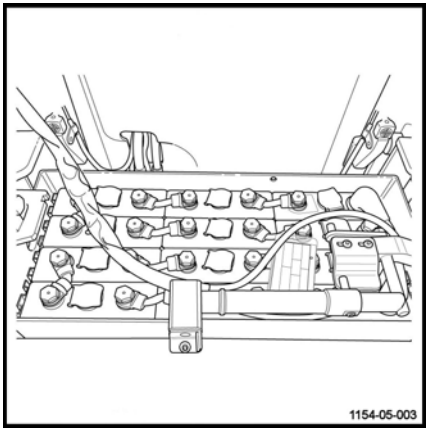

Charging the battery using an external charger

⚠ CAUTION

The battery may be damaged if discharged beyond a given limit.

– Charge the battery immediately.

– Park the truck safely.

– Before charging, check the condition of the battery cable and the charger cable. Replace them, if necessary.

– Open the hood and leave open.

– Remove the battery handle connector (1) from the truck plug (2).

– Connect the battery connector to the wall-mounted connector.

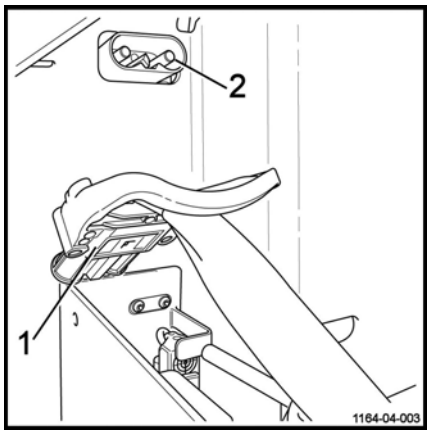

⚠ WARNING

Electrical risk.

Only unplug the battery connector from the battery charger when both the battery charger and truck are switched off.

NOTE

Follow the instructions provided by the battery and battery charger manufacturers (equalising charge).

⚠ WARNING

Risk of damage, short circuit or explosion.

Do not place any metallic objects or tools on the battery.

Smoking is forbidden.

⚠ WARNING

The electrolyte (diluted sulphuric acid) is toxic and very caustic.

Follow the safety regulations when handling battery acid.

⚠ WARNING

Explosive gases are generated during battery charging.

- Make sure that the work area is well-ventilated.
- Make sure that the battery hood remains open for the entire time the battery is charging.

Handling the truck in an emergency

Emergency mast lowering

▷

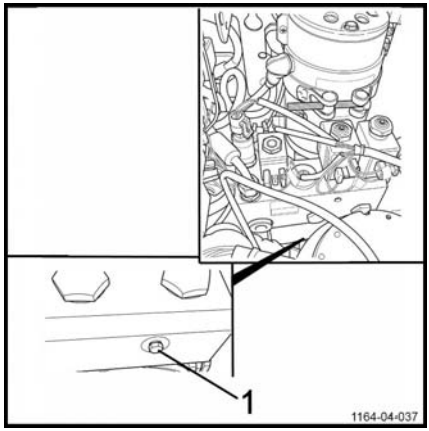

The emergency control (1) allows the mast to be lowered manually in the event of a problem.

This operation is to be performed as follows:

– Open the technical compartment door.

– Loosen the screw (1) using an 8 mm open-ended spanner.

⚠ DANGER

Danger of death!

Do not walk underneath raised loads!

Check that no one is in the danger area before manually lowering the mast.

When the forks are fully lowered:

– Loosen the screw (1) using an 8 mm open-ended spanner.

– Close the technical compartment door.

Truck towing procedure

It is not possible to tow the truck with no electrical function. The electromagnetic brake remains in the closed position.

Truck towing is authorised with a rigid connection (tow bar) if the truck to be towed can no longer be braked. Check that the towing vehicle is sufficiently powerful to pull and brake the truck being towed.

Moving with no battery

NOTE

In the event of an electrical fault or no battery, it is possible to unlock the brake manually.

CAUTION

This procedure must be carried out by authorised personnel.

- Unload the fork arms, then disconnect the battery.
- Remove the engine cover.
- Two M5 X 35 screws (1) are required.
- Screw the screws (1) to the brake (2) in the holes (3). The brake is then unlocked.

CAUTION

The truck must only be towed at low speeds.

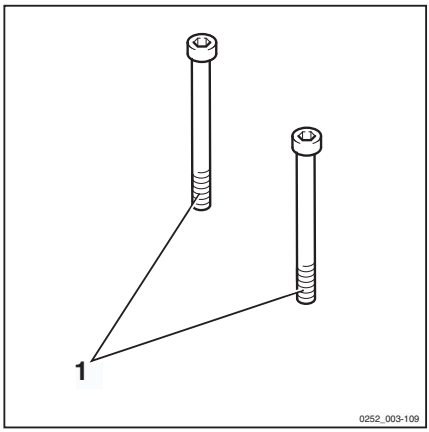

- After towing, chock the truck to prevent it from moving.
- To re-establish brake operation, unscrew and remove the two screws (1).
- Refit the covers.

WARNING

It is essential that the covers are correctly refitted before the machine is used.

▷

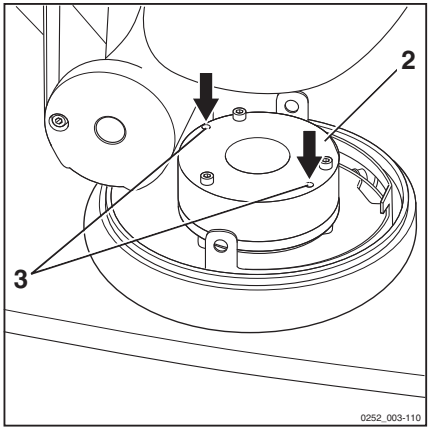

Handling the truck in specific situations

Slinging the truck

▷

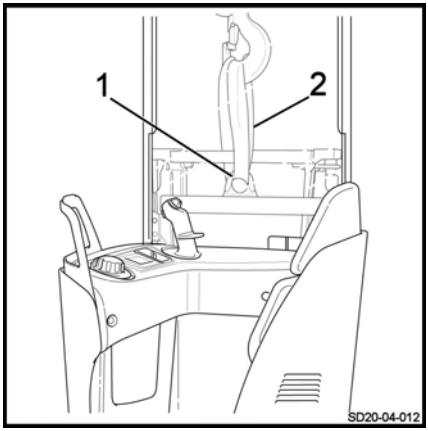

DANGER

Danger of truck falling.

Only use slings (2) or a hoist of sufficient quality. Check the weight of the machine (including battery) in order to choose a suitable device. Refer to the technical data.

Observe the following instructions:

- Immobilise the truck.
- Lower the forks.
- Switch off the ignition and remove the key.
- Press the emergency off switch.
- Remove any items that could fall.
- Protect all parts that come into contact with the lifting device (2).
- Hook the lifting device (2) onto the sling hook only (1).
- Lift the truck slowly and carefully.

NOTE

Never sling the truck by the control unit or other points not designed for this.

DANGER

Risk of falling.

Personnel must not stand under or near the truck when slinging the truck.

Lifting the truck

▷

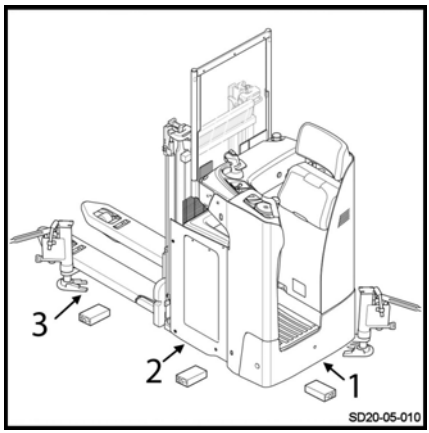

⚠ DANGER

Danger of swinging

The lifting action must be performed carefully.

For some work it is necessary to lift the truck.

- Raise the load arms.
- Switch off the ignition and unplug the battery connector.
- Use a jack with adequate lifting capacity.
- To service the load wheels or bogies, the jack must be fitted under the load arms as illustrated (1).
- For work on the lifting device, the jack must be placed under the battery frame (2).
- To lift the front section of the truck, place a jack under the chassis (3).

As a safety precaution, always insert a wooden wedge.

⚠ WARNING

Risk of truck tipping over.

Immobilise and chock the machine after lifting it.

Transporting the truck

⚠ CAUTION

Always switch off the ignition and disconnect the battery.

Never tie down or sling the truck by the control unit or other points not designed for this.

⚠ CAUTION

Risk of damage to the truck.

Use a hoist and woven **NON METALLIC** slings with an adequate lifting capacity. Refer to the load weight shown on the truck's capacity plate.

The lifting operations must be performed by qualified personnel.

Trucks are generally transported by road or by rail.

The truck must be suitably protected from the effects of the weather during transport and storage.

To load or unload the truck, use an inclined plane or a mobile ramp.

If the truck is out of service or if the battery has been removed, sling the truck. See **Chapter 4 Slinging the truck**.

⚠ DANGER

Danger of death.

Do not stand within the hoist's operating radius or below the lifted truck.

Transporting the truck in the lift

The truck must only be taken in lifts with an adequate loading capacity that are designed for this purpose, and for which authorisation has been received from the operator. Inside the lift, the truck must be immobilised so that no part is in contact with the wall of the lift cage.

A minimum safety distance of 100 mm from the walls of the lift must always be observed.

Anyone transported with the truck must only enter the lift after the truck has been correctly immobilised and they must exit the lift first.

Driving on loading bridges

Before crossing a loading bridge, the operator must make sure it is properly attached and secured and its load capacity is sufficient. Cross the loading bridge slowly and carefully. The driver must be sure that the vehicle to be entered is secured sufficiently against movement and that it can support the load of the forklift truck.

The lorry driver and lift truck operator must coordinate the departure time of the lorry.

5

Maintenance

General maintenance information

General

The following instructions contain all the information required for maintenance of your truck. Carry out the various maintenance work in compliance with the maintenance plan. This will ensure that your truck is reliable and in good working order and that the warranty remains valid.

Maintenance plan

One of the display functions indicates the truck's hours of use. Refer to it and consult the truck's maintenance plan.

The maintenance plan is followed by advice to facilitate work.

Maintenance intervals must be reduced if the truck is used under harsh conditions (extreme heat or cold, large quantities of dust).

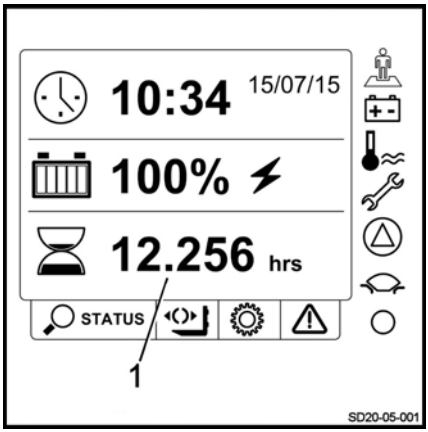

Grade and quantity of lubricants and other consumables

Only lubricants and other consumables specified in these operating instructions are authorised for use in maintenance work.

Lubricants and other consumables required for truck maintenance are listed in the maintenance specifications table.

Never mix different grades of grease or oil. If it is absolutely necessary to change brands, make sure to flush thoroughly beforehand.

Before changing any filters or working on the hydraulic system, thoroughly clean the surface and the areas around the part.

All containers used to pour oil must be clean.

Servicing and maintenance personnel training and qualification

Truck maintenance must only be carried out by qualified and authorised personnel.

The annual inspection for prevention of accidents at work must be carried out by a person qualified to do so. The person carrying out this inspection must provide their expertise and opinion without being influenced by economic factors or company internal issues. Safety is the only critical deciding factor.

The person responsible for carrying out the inspection must have sufficient knowledge and experience to be able to assess the condition of the truck and the efficiency of the protective installations in accordance with the technical regulations and principles established for checking industrial trucks.

Battery maintenance staff

Batteries must only be recharged, maintained and changed by specially trained personnel. Personnel must follow the manufacturer's instructions of the battery, the battery charger and the truck.

It is essential to follow the battery maintenance instructions and the battery charger operating instructions.

Maintenance operations that do not require special training

Simple maintenance operations such as checking the hydraulic fluid level or checking the battery electrolyte level can be carried out by persons with no special training.

A specific qualification is not necessary.

Refer to the maintenance section of this manual for further information.

Ordering spare parts and consumables

Spare parts are provided by our spare parts service department. You will find the information required to place an order in the spare parts and fitting catalogue.

Only use spare parts recommended by the manufacturer.

Unauthorised spare parts may increase the risk of accidents due to faults relating to quality or incorrect choices. Anyone who uses non-compliant spare parts must assume full responsibility in the event of an accident.

Safety guidelines for maintenance

Servicing and maintenance measures

To avoid accidents during servicing and maintenance operations, take all necessary safety measures. For example:

– Ensure that there is no risk of the truck moving or starting up unexpectedly. For this reason, remove the battery connector.

Working on the electrical equipment

Operations on the truck's electrical system must only be carried out when there is no voltage supply.

Operating checks, testing and adjustment work on parts supplied with voltage must only be carried out by personnel:

- who have received detailed instructions
- who have been authorised to perform this work
- who have taken the necessary precautionary measures.

Rings, metal bracelets etc., must be removed before carrying out any operations on electric components.

Remove the electric equipment (which comprises electric components such as the traction controller) before carrying out any welding operations. This precaution prevents this electric equipment from being damaged.

Operations on the electric system require the consent of the manufacturer.

Safety devices

After any repair or maintenance work, it is necessary:

- to refit all safety devices
- to check these for correct operation.

Recommended lubricants

⚠ CAUTION

Damage to equipment if non-recommended lubricants are used.

Only use recommended lubricants. Only the lubricants listed below are approved by the manufacturer. Do not mix lubricants. If in doubt, please contact the After-Sales Service Centre.

Hydraulic oil

Recommended oil for standard use:

ISO-L-HM 46 as per ISO 6743-4 or ISO VG46-HLP as per DIN 51524-2

Recommended oil for heavy-duty use:

ISO-L-HM 68 as per ISO 6743-4 or ISO VG68-HLP as per DIN 51524-2

Recommended oil for the cold store version:

ISO-L-HM 32 as per ISO 6743-4 or ISO VG32-HLP as per DIN 51524-2

Transmission oil

Recommended oil:

SAE 85W 90 API GL4

Aerosol can for chains

Standard chain spray

Grease for pinion gear and steering ring

⚠ CAUTION

Follow the maintenance and safety guidelines.

Multi-purpose grease

Lithium soap grease with EP agents and MoS 2**KPF 2N - 20** complying with the standard DIN 51825.

ENVIRONMENT NOTE

Used oil must be stored safely until it is disposed of in accordance with environmental regulations. No one should have access to the used oil. Do not dispose of used oil in drains or allow it to penetrate soil.

Technical data for inspection and maintenance

Assembly	Consumables/lubricants	Capacities/Adjustment values
Hydraulic system	Hydraulic oil	Between 3.7 and 4 l (working capacity)
Transmission gear	Transmission gear oil	1.5 l
Traction motor (3 kW)	1F1 fuse	Power: 300 A, quantity: 1
ES30-24 steering unit (0.185 kW S1)	3F1 fuse	Power: 40 A, quantity: 1
Pump motor (2.2 kW)	1F1 fuse	Power: 300 A, quantity: 1
Control fuse	1F3 fuse	Control: 7.5 A, quantity: 1
Control fuse	1F4 fuse	Control: 5 A, quantity: 1
Battery	Distilled water	As required
Joints	Lithium soap grease	As required

Accessing the technical compartment

In order to perform maintenance on various truck components, it is necessary to access the technical compartment.

– Immobilise the truck.

– Lower the forks.

– Switch off the truck (key or electronic key).

– Press the emergency off switch.

– Disconnect the battery connector from the fixed socket on the truck.

– Remove the mounting screw (1) at the bottom of the door. ▷

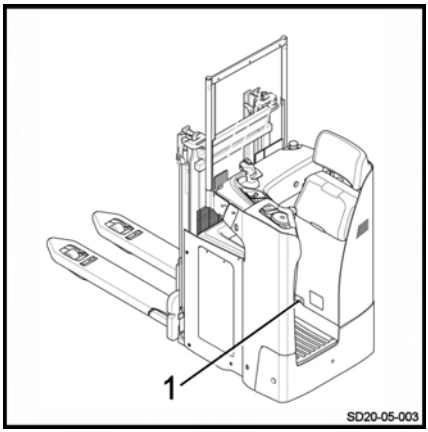

– Open the technical compartment door (2). ▷

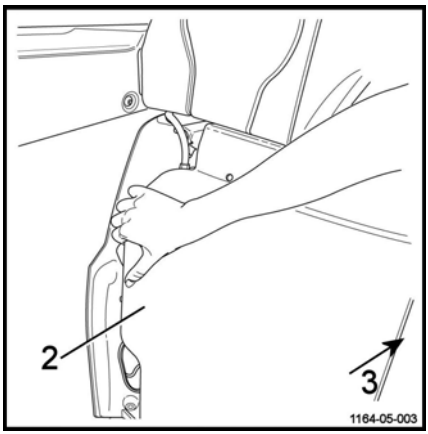

It is now possible to access the technical compartment. You must close the technical compartment door after the operation is finished.

– Close the technical compartment door (2).

⚠ CAUTION

Risk of trapping fingers

Take care not to trap your fingers between the door and the chassis.

Be careful not to trap your fingers in the external hinges (3).

– Refit the mounting screw (1).

– Reconnect the battery connector.

– Return the truck to service.

Maintenance plan as required

Depending on the application, environmental conditions and driving style, the following procedures should be carried out as required
Chassis, bodywork and fittings
Clean the truck
Wheels
Check the condition of the wheels
Electrical equipment
Checking the condition of the battery and the battery cable
Clean the battery and the battery compartment
Check the fuses

1000-hour/annual maintenance plan

Depending on the application, environmental conditions and driving style, the following procedures should be carried out every 1000, 2000, 4000, 7000 and 8000 hours
Preparation
Clean the truck
Check the error codes using the diagnostic tool
Chassis and equipment
Check the condition of the forks
Check the electromagnetic brake
Check and lubricate the hinges
Check the pump motor brushes for wear
Wheels
Check the tightness of the wheels
Check the stabilisers
Electrical equipment
Check the condition and correct positioning of the truck and battery cables
Check the electrical insulation between the chassis and the electric components
Check the battery acid level and the electrolyte level
Hydraulics
Check the hydraulic oil level
Check the condition of the pipework
Lift mast
Check the condition and the length of the mast chain
Lubricate the forks and the mast guide rollers
Check the condition and the mounting for the guard grille

5000-hour maintenance plan

Depending on the application, environmental conditions and driving style, the following procedures should be carried out every 5000 and 10,000 hours
Information

Carry out all 1000-hour maintenance work
Hydraulics
Drain the hydraulic oil

10,000-hour service plan

Depending on the application, environmental conditions and driving style, the following procedures should be carried out every 10,000 hours
Information
Carry out all 1000-hour maintenance work
Carry out all 5000-hour maintenance work
Motor
Drain the transmission gear oil

Chassis, bodywork and fittings

Cleaning the truck

Cleaning instructions

– Park the truck.

– Press the emergency off switch.

⚠ CAUTION

Electrical hazards

The battery must always be disconnected during cleaning procedures.

Washing the outside of the truck

▷

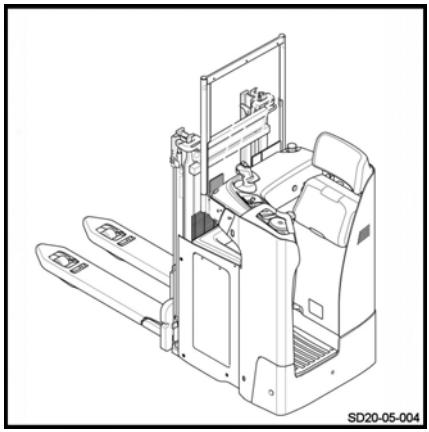

⚠ WARNING

Risk of damage to the truck.

– Do not use flammable liquids to clean the truck.
– The safety rules set out above must be followed to prevent spark formation. They could lead to a short circuit.
– All components that are sensitive to moisture (particularly electric components) must be protected when the truck is cleaned.
– Follow the manufacturer's instructions when using the cleaning product.

– Clean the truck with a non-flammable cleaning product mixed with water, a sponge and cloths.

– Specifically clean the oil filler holes and surrounding area as well as the lubricating nipples (before lubrication).

NOTE

A frequently cleaned truck must be lubricated more regularly.

Cleaning the electrical installations

⚠ WARNING

Electrical hazards

Do not expose electrical equipment (especially motors) to direct jets.

NOTE

- *Only use dry cleaning products*
- *Do not remove the cowlings*

– Clean the electrical installations with a non-metal brush and dry with lightly compressed air.

After washing

– Carefully dry the truck (e.g. with compressed air).

WARNING

Use of compressed air

It is advisable to wear protection goggles and a mask.

– Restart the truck in accordance with the instructions.

NOTE

If, despite taking precautions, traces of moisture remain in the motor, dry it using compressed air. After having eliminated any traces of moisture, the truck may be reactivated. Do not move it forward to prevent any corrosion.

General information on battery maintenance

DANGER

Risk of injury

Before carrying out any operations on the electric installation, turn the truck power supply off. Disconnect the battery connector.

Precautions to be taken during battery maintenance

The plugs on the battery cells must always be dry and clean.

Neutralise any spilt battery acid immediately.

The battery terminals and lugs must be clean, lightly covered with grease for terminals and securely tightened.

Charging the battery

During the charging process, the surface of the battery cells must be clear to ensure sufficient ventilation.

Do not place metal objects on the battery.

The battery cover must remain open during charging. See the chapter entitled **Battery charging using an external charger.**

Battery type

Lead or gel batteries are used. It is advisable to choose a compatible charger.

Before charging, ensure that the charger is suitable for the type of battery.

CAUTION

Gel batteries are subject to specific charging, maintenance and treatment instructions. A non-compatible charger may result in a battery failure.

Observe the manufacturer's recommendations.

NOTE

- *The discharge indicators used to check the battery must also be suitable for the type of battery*
- *Contact the relevant After-Sales Service Centre*

Charging the battery

– Park the truck in an area without condensation or pollution and with sufficient ventilation.

– Stop the truck.

– Press the emergency off switch.

– Open the battery hood.

– Follow the instructions.

CAUTION

Do not expose the charger to water, rain, oils, grease or any similar substances.

The charger becomes hot during the operation.

CAUTION

Risk of injury

Do not obstruct the ventilation. Allow the charger to cool down for 10 minutes after charging is complete before touching it. Do not use the charger out of the truck.

Checking the condition of the forks

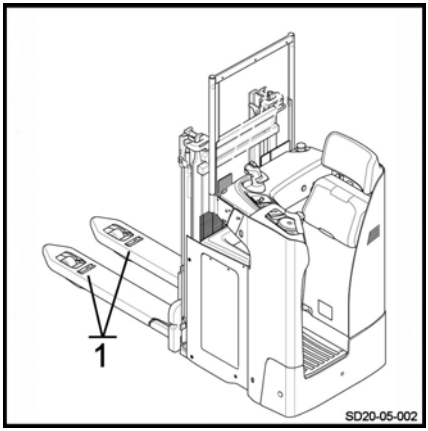

– Check that the fork arms (1) show no signs of deformation, splits, heavy wear or cracks.

⚠ CAUTION

Truck damage.

If the fork carriage is damaged, have it changed by the After-Sales Service Centre.

Steering and wheels

Maintaining the wheels and rollers ▷

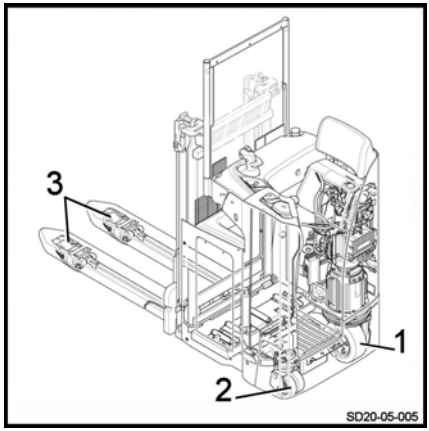

The tyre treads on the drive wheel (1), stabilising wheels (2) and rollers (3) should show no signs of deterioration.

– Raise the truck until the wheels are off the ground.
– Check that the wheels rotate freely and remove any objects that may prevent them from turning or may obstruct them.

NOTE

Contact the After-Sales Service Centre regarding the replacement of wheels and rollers.

Electrical equipment

Cleaning and blowing out the electrical components

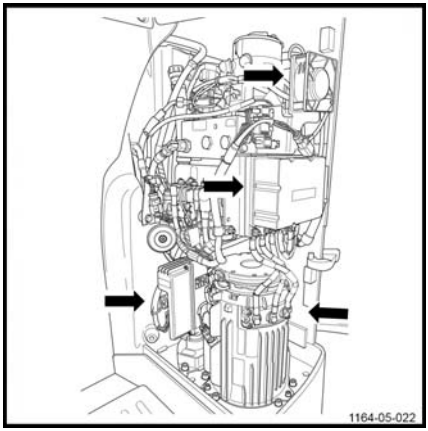

CAUTION

Electrical hazards

Always disconnect the battery connector before working on an electrical component.

- Press in the emergency off switch.
- Disconnect the battery connector.
- Open the technical compartment door.
- Blow the electrical components with compressed air.

WARNING

Use of compressed air

It is advisable to wear protection goggles and a mask.

- Check the condition of the cable harness connector pins.
- Close the technical compartment door.
- Return the truck to service.

Checking the fuses

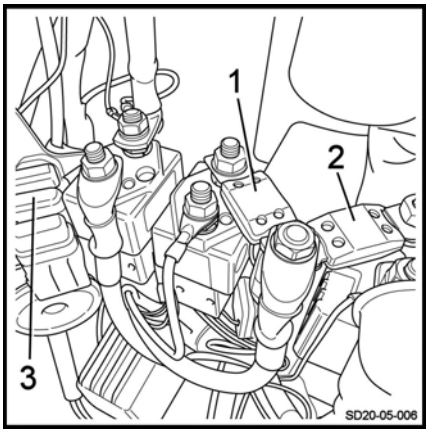

CAUTION

Electricity danger

Before carrying out any work on the electric installation, turn the power supply off. Disconnect the battery connector for this purpose.

- Park the truck.
- Switch off the truck and press the emergency off switch.
- Disconnect the battery connector from the fixed socket on the truck.
- Open the door of the technical compartment to access the fuses.
- Check that the following two fuses are correctly secured:

The 300 A fuse (1) protects the traction and lift power circuit.

The 40 A fuse (2) protects the steering circuits.

The 5-A fuse (3) and 7.5-A fuse protect the control circuit.

This operation should preferably be carried out by the After-Sales Service Centre.

Checking the battery acid level and electrolyte density

▷

NOTE

Remove the battery from its compartment to check the water level.

WARNING

The electrolyte (diluted sulphuric acid) is poisonous and corrosive.

- Always wear suitable protective equipment (industrial protection goggles, safety gloves) when working on a battery.
- Never wear a watch or jewellery when handling battery acid.
- Do not allow any acid to get onto the clothing or skin or into the eyes. If this does happen, rinse immediately with plenty of clean water.
- Immediately rinse away any spilled battery acid with plenty of water.
- In case of injury, seek medical advice immediately.
- Always follow the safety information provided by the battery manufacturer.
- Comply with the regulations in force.

- Check the battery acid level and electrolyte density according to the battery manufacturer's recommendations.
- The cell covers of the battery must be kept dry and clean.
- Any spillage of battery acid must be neutralised immediately.

ENVIRONMENT NOTE

Dispose of any used battery acid in accordance with the regulations.

Checking the condition of cables, terminals and the battery connector

- Check that the cable insulation is undamaged.
- Check that there are no signs of heat build-up in the connections.
- Check that the "+" and "-" output terminals are not sulphated (presence of white salt).
- Check the condition of the battery connector contacts and the presence of the keying pin.

⚠ CAUTION

Risk of damaging the equipment.

The points mentioned above can cause serious incidents. In the event of an incident, contact our After-Sales Service Centre as quickly as possible.

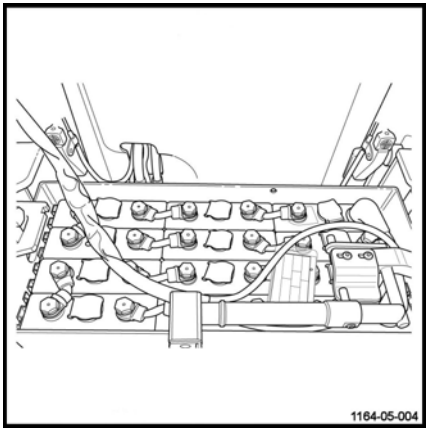

Hydraulic systems

Checking the hydraulic system for leaks

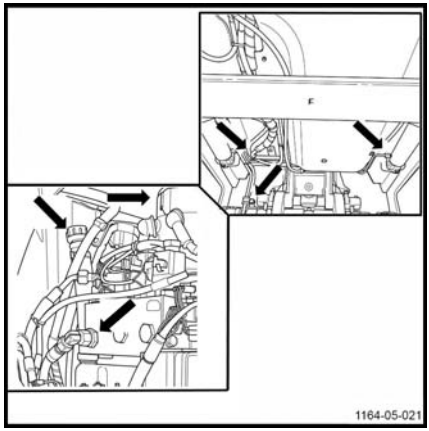

- Inspect the hydraulic system: pipes, hoses and connections between the pump unit and the cylinders.
- Tighten the connections if required.
- Check the cylinders for leaks.
- Check that the hoses are attached correctly and show no signs of friction wear.
- Check that there are no signs of oil leakage under the truck.

⚠ CAUTION

Risk of damaging the truck

In the event of leakage, contact the After-Sales Service Centre.

Check the hydraulic oil level

To check the hydraulic oil level, proceed as follows:

- Immobilise the truck.
- Lower the forks.
- Switch off the ignition and remove the key.
- Press in the emergency off switch.
- Disconnect the battery connector.
- Open the technical compartment door. ▷

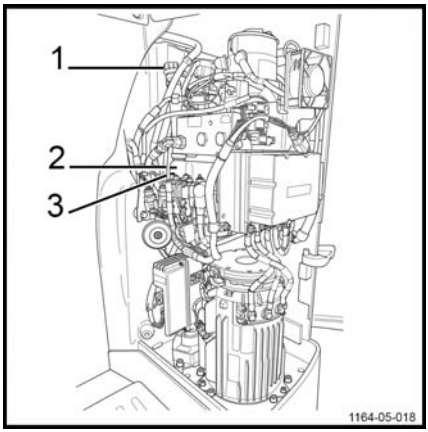

To ensure proper usage of the truck functions, the oil level must be between the minimum (3) and maximum (2) marks on the tank.

- Remove the plug (1). If necessary, top up via the opening.
- Refit the plug (1) afterwards.

⚠ CAUTION

Risk of damage to hydraulic components.

Only use hydraulic oil that complies with the manufacturer's specifications (see table of recommended lubricants).

- Close the technical compartment door.
- Reconnect the battery connector.
- Return the truck to service.

Lift mast

Cleaning and lubricating the chains

NOTE

If the lifting chain is too dirty, clean it.

- Place a recipient underneath the lifting chain.
- Clean using a paraffin-based product (petroleum, fuel oil etc.). Observe the manufacturer's safety guidelines.
- If using a steam jet, do not use additives.
- Immediately dry the chain and its joints with compressed air. Move the chain frequently during this operation.
- Lubricate the chain immediately using a special aerosol chain lubricant.

CAUTION

Risk of the equipment becoming worn or damaged.

Chains are safety components. Use of cold cleaning agents, chemical products, acid or chlorinated products could destroy the chains.

NOTE

Use of high pressure liquid cleaning devices is not advisable.

DANGER

Danger of death and/or risk of serious damage to equipment

On trucks fitted with macrolon mast protection, clean the translucent screen thoroughly after lubrication operations.

Adjusting the length of the mast chains

NOTE

Depending on the use of the truck, the chains are liable to stretch and as a result they have to be adjusted regularly.

- Fully lower the mast. ▷
- Undo the locknut (2)
- Place the chains under slight tension by tightening the nut (1).
- Retighten the locknut (2).

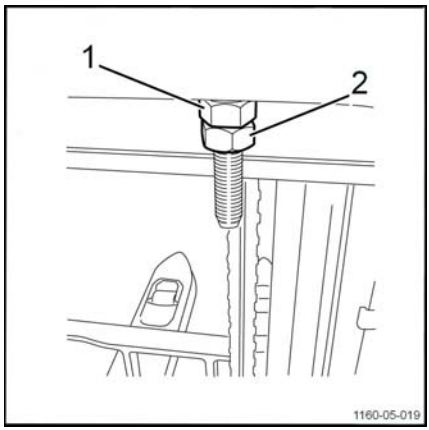

CAUTION

Risk of the equipment becoming worn or damaged.

After this adjustment, check that the fork carriage does not reach the mechanical stop at the top of the mast during the maximum lift. If this is the case, slacken or replace the chains. We recommend that this operation be carried out by our After-Sales Service Centre.

Checking the protective screen

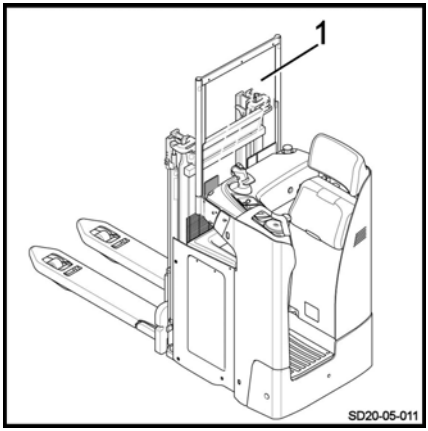

It is important to check the condition of the mast protective screens and to check that the mountings are tightened.

- Check that the protective screen (1) is correctly attached and in good condition (undamaged).
- Replace the protective screen if it is damaged.
- Adhere to the number of mountings defined by the manufacturer.

WARNING

Risk of serious injury and/or serious damage to equipment

Never touch moving parts and assemblies without first having lowered the equipment to the ground and disconnected the battery.

DANGER

Poor visibility

The screen must be installed and correctly attached.

Do not attach anything to the screen that could affect the visibility of the forks.

When cleaning the fork carriage side, only clean the screen when the fork carriage is in the lowered position.

Storage and putting out of commission

Storage of truck

Precautions should be taken if the truck must not be used for a reasonably long period. The operations depend on the length of time it is unused.

Long-term truck storage

The following work must be carried out on the truck to prevent corrosion if it needs to be stored for a long period of time. If the truck is to be stored for more than two months, it must be positioned in a clean and dry area. The area must be well-ventilated with no risk of freezing.

The following operations must be performed:

- Clean the truck thoroughly.
- Check the hydraulic oil level and refill if necessary.
- Lower the forks onto a suitable support (e.g. a pallet) until the chains are slack.
- Coat any unpainted metal parts with a thin layer of oil or grease.
- Grease all hinges and joints.
- Check battery condition and electrolyte density. Maintain the battery in accordance with the manufacturer's requirements. (Follow the instructions).
- Spray contacts with an aerosol product designed for contacts.
- Raise and chock the truck: the wheels must not touch the ground in order to prevent irreversible deformation of the tyres.
- Cover the truck with a cotton cover to protect it from dust.

⚠ CAUTION

We recommend that you do not use a plastic sheet as this encourages condensation to form.

Consult the service department for further measures to take if the truck must be stored for a longer period of time.

Recommissioning after storage

If the truck has been stored for more than six months, it must be checked carefully before being recommissioned. This check is similar to the workplace accident prevention inspection. It is therefore necessary to check all points and systems that are important for truck safety.

Carry out the following operations:

- Clean the truck thoroughly.
- Grease all hinges and joints.
- Check the condition and density of electrolyte, and, if necessary, recharge the battery.
- Check that there are no traces of condensation water in the hydraulic oil. Drain if necessary.
- Carry out the same maintenance work as for the first time it was commissioned.
- Commission the truck.
- In particular, check the following during start-up:

• traction, control and steering.
• brakes (service brake and parking brake).
• lifting device.

Permanent Putting Out of Commission (Destruction)

When scrapping the truck, it is necessary to:

- Remove the various parts of the truck (covers, battery, chains, motors etc.)
- Sort out the components depending on their type: pipes, rubber components, lubricants, aluminium, iron etc.
- Before scrapping the truck, notify the competent authorities of your country in writing.
- After receiving the authorisation from the competent authorities, remove any components according to national standards.

NOTE

The client is solely responsible for any irregularities he has committed during or after the scrapping of the truck's components and the removal of components.

6

Technical features

SXD 20 datasheet

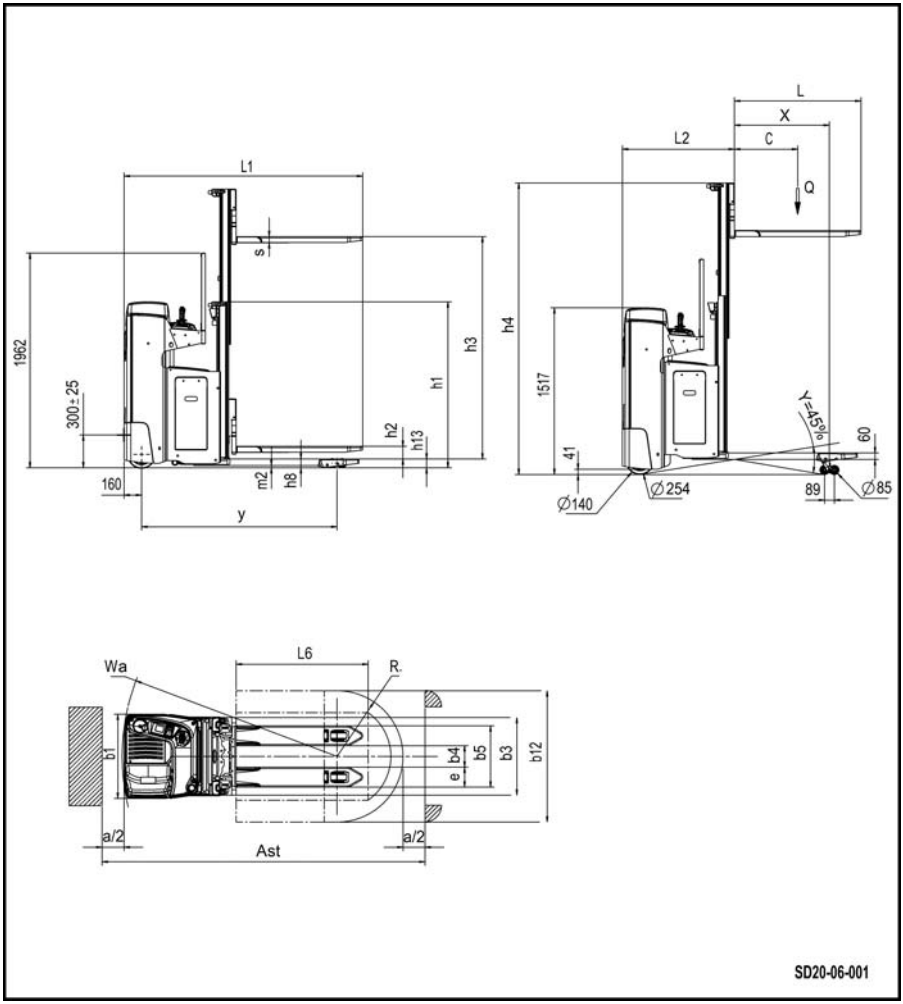

DESCRIPTION			
1.1	Manufacturer		STILL
1.2	Model type		SXD 20
1.3	Method of propulsion: battery, diesel, petrol, LPG, mains power		Battery
1.4	Driving: manual, pedestrian, standing, seated, order picking		Standing
1.5	Nominal capacity Main lift Main lift/Initial lift Initial lift only	Q (kg)	1200 800/1200 2000
1.6	Centre of gravity	c (mm)	600
1.8	Distance from load wheel axle to load mating face (±5 mm)	x	860
1.9	Wheelbase (±5 mm)	y	1780

WEIGHT			
2.1	Kerb weight with battery (±10%) (2)	kg	1348
2.2	Load per laden axle, drive side/load side (±10%) (1) Load = 2000 kg	kg	1273/2075
2.3	Load per unladen axle, drive side/load side (±10%) (1)	kg	943/405

WHEELS			
3.1	Drive side/load side tyres: (Polyurethane: P, Rubber: R) Drive side/load side		R+P/P
3.2	Drive wheel dimensions	Ø x l (mm)	Ø 254 x l 102
3.3	Wheel dimensions, load side	Ø x l (mm)	Ø 85 X l 85 Bogies (Ø 85 X l 60)
3.4	Additional wheels	Ø x l (mm)	2 x Ø 140 X l 50
3.5	Number of wheels at drive side/load side (x = drive wheel)		1x + 1/2 (1x + 1/4)
3.6	Drive side track width (±5 mm)	mm	484
3.7	Load side track width (±5 mm)	mm	380

DIMENSIONS			
4.2	Lowered mast height (±5 mm)	h1 (mm)	1315 (5)
4.3	Free lift (±5 mm)	h2 (mm)	795 (6)
4.4	Lift (±5 mm)	h3 (mm)	1724 (5)
4.5	Extended mast height (±5 mm) (4)	h4 (mm)	2244 (5)

4.6	Initial lift (±5 mm)	h5 (mm)	125
4.10	Load arm/ground height (±0/5 mm)	h8 (mm)	80
4.15	Height at the ends of the forks in the lower position (±5 mm)	h13 (mm)	86
4.19	Total length (±5 mm)	L1 (mm)	2170
4.20	Length to the load mating face (±5 mm)	L2 (mm)	1020
4.21	Total width (±5 mm)	b1 (mm)	770
4.22	Fork arm dimensions	s/e/L (mm)	50/180/1150
4.22	Load arm dimensions	s/e/L (mm)	75/150/1115
4.24	Fork carriage width (±5 mm)	b3 (mm)	710
4.25	Outside fork arm spread (±5 mm)	b5 (mm)	560
4.26	Inside load arm spread (±5 mm)	b4 (mm)	196
4.32	Ground clearance at centre of wheelbase (±2 mm)	m2 (mm)	20
4.33	Dimension of the b12 x L6 load	b12xL16 (mm)	800 x 1200
4.34	Aisle width with predetermined load (3)	Ast (mm)	2640
4.34.2	Aisle width with a 800 x 1200 pallet crosswise	Ast (mm)	2750
4.35	Turning radius (minimum) (±20 mm)	Wa (mm)	1950

PERFORMANCE DATA			
5.1	Travel speed, laden/unladen (±5%)	km/h	10/10
5.2	Initial lifting speed (±10%)	m/s	0.064/0.089
	Main lifting speed (±10%)	m/s	0.013/0.023
5.3	Initial lowering speed (±10%)	m/s	0.073/0.075
	Main lowering speed (±10%)	m/s	0.045/0.032
5.8	Maximum gradient (0 kg/1200 kg/2000 kg)	%	20/15/13
5.10	Service brake		electromagnetic

DRIVE SYSTEM			
6.1	Traction motor, S2: 60 minutes	kW	3
6.2	Lift motor at S3: 10% utilisation	kW	2.2
6.3	Battery type in accordance with DIN 43535		3PzS side access
6.4	Battery voltage and capacity (discharge in 5 hours)	V/Ah	24/375

6.5	Battery weight (±10%)	(kg)	290
6.6	Energy consumption according to standardised VDI cycle	kWh/1h	1.01
6.7	Turnover output	t/h	1.36
6.8	Energy consumption at turnover output	kWh/1h	1.68

MISCELLANEOUS			
8.1	Speed control		LAC controller
10.7	Noise level at operator's ears	dB (A)	67
	Level of vibration felt by the operator (EN 13059)	m/s^2	0.74

(1) Weight according to line 2.1

(2) With battery line 6.5

(3) Ast = Wa + R + a (pallet stacker)

Safety distance a = 200 mm

(4) Load backrest mandatory for Standard/Duplex 1924 / 2024 and 2124 masts

Add 280 mm to the h4 mast values

(5) With Standard/Duplex 1724 mast

(6) With Duplex 1724 mast

Mast types

Mast type	Standard				
	1574S	1724S	1924S	2024S	2124S
h1	1240	1315	1415	1465	1515
h1'	1315	1390	1490	1540	1590
h2	150	150	150	150	150
h3	1574	1724	1924	2024	2124
h4	2094	2244	2444	2544	2644

Mast type	Duplex				
	1574D	1724D	1924D	2024D	2124D
h1	1240	1315	1415	1465	1515
h1'	/	/	/	/	/
h2	720	795	895	945	995
h3	1574	1724	1924	2024	2124
h4	2094	2244	2444	2544	2644

A

Accessing the technical compartment . . . 97
Address of manufacturer I
Adjusting the length of the mast chains . 112
Aerosol can for chains 95

B

Batteries 30
Battery
Closing the battery hood 75
Opening the battery hood 75
Type 74
Battery acid 12
Before leaving the machine 67, 70
Before picking up a load 64
Braking 30, 48
Braking by releasing the drive switch 48
Braking by reversing the drive direction . . 48

C

CE labelling 3
Changing the side access battery 76
Charging the battery 104
Charging the battery using an external charger 82
Checking the battery acid level and electrolyte density 108
Checking the battery cables, terminals and connector 109
Checking the brakes 34
Checking the condition of the forks 105
Checking the emergency shutdown 33
Checking the fuses 107
Checking the horn 35
Checking the protective screen 113
Checks prior to start-up 32
Cleaning and lubricating the chains 112
Cleaning the truck 102
Climatic conditions 7
Climbing on and off the truck 38
cold store 71
Cold store usage 71
Consumables 11
Battery acid safety instructions 12
Disposal 13
Oil Safety Information 11
Safety information for handling hydraulic fluid 12
Contact details I
Copyright and property rights 3

D

Dashboard elements 22
Definition of directions 46
Description of use 7
Destruction 115
Display of the drive wheel position 40
Display operating unit 25
Display unit
Activity indicator 43
Drive programme 42
Error codes menu 44
Operator present 41
Settings 42
Start-up screen 44
Temperature 42
Warnings 42
Disposing of components and batteries . . . 8
Drive program
Blue Q mode 50
Hare mode 49
Tortoise mode 50
Drive system 30
Driver rights,duties and rules of behaviour 16
Driver's compartment 30
Drivers 16
Driving 47
Driving on loading bridges 89
Driving safety guidelines 45

E

EC declaration of conformity 4

Electrical equipment
Cleaning and blowing out the components. 107
Electromagnetic braking 48
Electronic key (option) 23
Emergency lowering 84

F

Features 30
FleetManager™
Colour code for the LEDs 55
Commissioning a truck equipped with a keypad or an electronic key . 54
Commissioning a truck equipped with an RFID reading device 54
Description 53
Disconnecting a truck equipped with a keypad or electronic key . . . 57
Disconnecting a truck equipped with an RFID reading device 58
Disconnecting the truck 57
Start-up 54

G

General 2, 92
General information on battery maintenance 104
General view of the technical compartment 21
Grade and quantity of lubricants and other consumables 92
Grease for pinion gear and steering ring . 95

H

Handling a single load 64
Handling two stacked pallets 68
Horn
Operating the horn 49
Hydraulic fluid 12
Hydraulic oil 95
Hydraulic system
Check the hydraulic oil level 111
Checking the hydraulic system for leaks 110

I

Identification label 5

L

Lift control elements 61
Lifting
Base lift 62
Main lift 61
Lifting the truck 88
Load handling safety rules 59
Location of markings 26

M

Maintaining the wheels and rollers 106
Maintenance plan 92
1000-hour/annual 100
5000 hours 100
As required 99
Managing battery charging 41
Mast 30
Mast types for trucks 122
Multi-purpose grease 95

N

Noise emission values 14

O

Oils 11
Operating company 15
Operator presence pedal 39
Order picking 74
Ordering spare parts and consumables . . 93

P

Permanent Putting Out of Commission . 115
Picking up a load at a height 67
Picking up a load from the ground 65

Picking up two loads 68
Precautions to be taken during battery maintenance 104
Progressive stopping of the carriage in the lower position 62
Prohibition of use by unauthorised persons 16
Proper usage 7

R

Reading the capacity label 63
Recommended lubricants 95
Residual dangers, residual risks 15
Restarting work 73

S

Safety devices 94
Safety Inspection 17
Selection buttons 40
Serial number 27
Service plan
10,000 hours 101
Servicing and maintenance measures . . 94
Setting a load down on the ground 65
Setting down two loads 69
Settings menu 43
Slinging the truck 87
Specialist 16
Stability 15
Stacking a load 66
Start-up 33, 46
Starting on a slope 51
Steering 30
Steering knob option 52
Stopping the truck 73
SXD 20 datasheet 118
Symbols used 8

T

Technical data for inspection and maintenance 96
Technical description 30
Transmission oil 95
Transporting a load 65
Transporting the truck 88
Transporting the truck in the lift 89
Transporting two loads 69
Travelling down slopes 51
Travelling up slopes 51
Truck operating instructions 36
Truck overview 20

U

Unauthorised use 8
Using the truck on a slope 50

V

Vibrations
Vibration characteristics for vibrations to which the body is exposed 14

W

Working on the electrical equipment 94

STILL GmbH

11648011551 EN – 06/2018