Original instructions

Reach trucks

FM-X, FM-X N, FM-X W, FM-X EW, Li-ion

FM-X-10
FM-X-12
FM-X-14
FM-X-17
FM-X-20
FM-X-20 HD
FM-X-25

1900 1901 1902 1903 1904
1905 1906 1907 1908 1909
1910 1914 1915 1916 1917
1918 1919 1920 1921 1922

first in intralogistics

50988078001 EN - 10/2018

Address of manufacturer and contact details

STILL GmbH
Berzeliusstraße 10
22113 Hamburg, Germany
Tel. +49 (0) 40 7339-0
Fax: +49 (0) 40 7339-1622
Email: info@still.de
Website: http://www.still.de

Rules for the operating company of industrial trucks

In addition to these operating instructions, a code of practice containing additional information for the operating companies of industrial trucks is also available.

This guide provides information for handling industrial trucks:

- Information on how to select suitable industrial trucks for a particular area of application
- Prerequisites for the safe operation of industrial trucks
- Information on the use of industrial trucks
- Information on transport, initial commissioning and storage of industrial trucks

Internet address and QR code

The information can be accessed at any time by pasting the address **https://m.still.de/vdma** in a web browser or by scanning the QR code.

1 Foreword

Your truck . . . 2
General . . . 2
CE labelling . . . 2
EC declaration of conformity in accordance with Machinery Directive . . . 3
Accessories . . . 4
Labelling points . . . 5
Nameplate . . . 6
Production number . . . 7
Nameplate of a lithium-ion battery . . . 7

Using the truck . . . 8
Commissioning . . . 8
Proper usage . . . 8
Intended use of the lithium-ion battery (variant) . . . 8
Impermissible use . . . 9
Place of use . . . 9
Parking in temperatures below -10°C . . . 10
Using working platforms . . . 11

Information about the documentation . . . 12
Documentation scope . . . 12
Supplementary documentation . . . 13
Issue date and topicality of the operating instructions . . . 14
Copyright and trademark rights . . . 14
Explanation of information symbols used . . . 14
List of abbreviations . . . 15
Defining directions . . . 17
Schematic views . . . 18

Environmental considerations . . . 19
Packaging . . . 19
Disposal of components and batteries . . . 19

2 Safety

Definition of responsible persons . . . 22
Operating company . . . 22
Specialist . . . 22
Drivers . . . 23

Basic principles for safe operation . . . 25
Insurance cover on company premises . . . 25
Special notes when using lithium-ion batteries (variant) . . . 25
Changes and retrofitting . . . 29

Modifications to the overhead guard and cabs . . . 31
Seat belt . . . 31
Safety information for FM-X Wide, Extra Wide (W, EW) . . . 32
Warning regarding non-original parts . . . 32
Damage, defects and misuse of safety systems . . . 33
Wheels and tyres . . . 33
Medical equipment . . . 34
Exercise caution when handling gas springs and accumulators . . . 35
Length of the fork arms . . . 35

Residual risk . . . 37
Residual dangers, residual risks . . . 37
Special risks associated with using the truck and attachments . . . 38
Overview of hazards and countermeasures . . . 40
Danger to employees . . . 43

Safety tests . . . 44
Carrying out regular inspections on the truck . . . 44
Insulation testing . . . 44

Safety regulations for handling consumables . . . 45
Permissible consumables . . . 45
Oils . . . 46
Hydraulic fluid . . . 47
Battery acid . . . 48
Brake fluid . . . 49
Disposal of consumables . . . 50

Commissioning the FleetManager™ (variant) . . . 51
Activating the access control after delivery of the truck . . . 51

Emissions . . . 51

3 Overviews

Overview . . . 56

Overview of the driver's compartment . . . 57

Shelves and cup holders . . . 58

Operating devices and display elements . . . 59
Display and operating unit . . . 59
Operating status displays on the display and operating unit . . . 60
Display messages . . . 61
Entering truck operating data via the display and operating unit . . . 65
Lithium-ion battery display . . . 70
Operating devices for hydraulic and traction functions . . . 70

Joystick 4Plus . . . 71
Fingertip . . . 72

4 Operation

Testing and activities before daily use . . . 74
Visual inspections and function checking . . . 74
Climbing into and out of the truck . . . 77
Adjusting the MSG 65/MSG 75 driver's seat . . . 79
Adjusting the steering column . . . 83
Filling the washer system (variant) . . . 84
Unlocking the emergency off switch . . . 84
Switching on the key switch . . . 85
Access authorisation with PIN code (variant) . . . 87
Operating the signal horn . . . 88
Checking the brake system for correct function . . . 88
Checking the steering system for correct function . . . 90
Checking the emergency off function . . . 90
Checking the "automatic tilting centre position" (variant) for correct function . . . 91

Lighting . . . 92
STILL SafetyLight (variant) . . . 92
Switching the working spotlights (variant) on and off . . . 93

Efficiency and drive modes . . . 94
Blue-Q efficiency mode . . . 94
OPTISPEED - Continuously variable reduction in driving speed or hydraulic functions (variant) . . . 94

Driving . . . 96
Safety regulations when driving . . . 96
Roadways . . . 98
Side chassis supports . . . 101
Enabling truck functions using the foot switch and seat switch . . . 101
Setting the drive programme . . . 104
Selecting the drive direction . . . 105
Actuating the drive direction switch, joystick 4Plus . . . 106
Actuating the drive direction switch, fingertip . . . 106
Starting drive mode, single-pedal version . . . 107
Starting drive mode, dual-pedal version (variant) . . . 109
Operating the service brake . . . 111
Applying the electromagnetic parking brake . . . 112
Steering . . . 114
Emergency operation of the reach measurement system . . . 115

Parking 118
Parking the truck securely 118

Lifting 119
Lifting system variants 119
Lift mast versions 119
Lifting system operating devices 120
Joystick 4Plus lifting system 121
Fingertip lifting system 124
Automatic lift cut out (variant) 126
Reach-lower lock (variant) 128
Automatic centre position (variant) 129
Speed limitation safety function 131
Changing the fork arms 131
Fork extension (variant) 134
Load backrest (variant) 135
Working platforms 136
Malfunctions in lifting mode 136

Handling loads 138
Safety regulations when handing loads 138
Before picking up a load 138
Picking up loads 140
Danger area 142
Transporting pallets 143
Transporting suspended loads 143
Picking up a load 144
Transporting loads 147
Setting down loads 149
Driving on upward and downward gradients 151
Driving onto lifts 151

Attachments 153
Fitting attachments 153
Releasing the pressure from the auxiliary hydraulics 155
General instructions for controlling attachments 156
Controlling attachments (variant) using the joystick 4Plus (5th/6th hydraulic function) 157
Controlling attachments (variant) with the fingertip (5th/6th hydraulic function) 160
Operating the clamp locking mechanism (variant) with a joystick 4Plus 162
Operating the clamp locking mechanism (variant) with the fingertip switch 164
Picking up a load using attachments 165

Auxiliary equipment 166
FleetManager (variant) 166

Shock recognition (variant) . . . 166
Active Load Stabilisation ALS (variant) . . . 166
Optical height measuring system (variant) . . . 168
Load measurement (variant) . . . 173
Speed limitation based on lift height . . . 175
Button for speed limitation, creep speed (variant) . . . 176
Camera/monitor system (variant) . . . 176
Electrical adjustment mechanism for the driver's compartment (variant) . . . 177
Overhead guard with optimised visibility (variant) . . . 178
Clipboard (variant) . . . 179

Battery change frame (variant) . . . 179
General . . . 179
Safe handling . . . 180
Load capacity . . . 180
Area of application . . . 180
Adjusting the transfer height . . . 181
Locking the battery change frame . . . 181
Battery replacement area . . . 182

Lift height preselector/easy Target (variant) . . . 184
General . . . 184
Definition of terms . . . 185
AUTO MODE function . . . 186
Operating the lift height preselector . . . 189
Teach-in, general . . . 192
Performing a teach-in . . . 193
easy Target/easy Target Plus (variants) . . . 196
Approaching target heights using "easy Target" . . . 198
Positioning the fork horizontally using "easy Target Plus" . . . 199

Cab (variant) . . . 200
General information about the cab . . . 200
Opening the cab door . . . 201
Closing the cab door . . . 202
Cab operating devices . . . 203
Cab interior lighting (variant) . . . 204
Heating system in the cab (variant) . . . 204
Emergency exit window in the cab . . . 207

Cold store application . . . 207
General . . . 207
Areas of application . . . 208
Description of the cold store equipment . . . 209
Battery in the cold store . . . 210

Impermissible use of the lithium-ion battery in the shock cold store (-45°C) 210
Before entering the cold store 211

Procedure in emergencies 212
Emergency shutdown 212
Procedure if truck tips over 213
Emergency lowering 214
Towing 215

Connecting and disconnecting the battery male connector 217
Connecting the battery male connector 217
Disconnecting the battery male connector 218

Handling the lead-acid battery 219
Safety regulations when handling the battery 219
Maintaining the battery 222
Checking the battery condition, acid level and acid density 223
Checking the battery charge status 225
Charging the battery 225
Equalising charging to preserve the battery capacity 228

Handling the lithium-ion battery (variant) 230
Safety regulations for handling the lithium-ion battery 230
Approved lithium-ion batteries 233
Lithium-ion batteries "GGS Li-ion 48 V (BG4)" 9.8 kWh and 39.2 kWh 234
Regulations for storing lithium-ion batteries 235
Checking the battery charge status (lithium-ion battery) 236
Charging the lithium-ion battery upon delivery 238
Charging the lithium-ion battery 239
Recommissioning the lithium-ion battery following deep discharge 241

Replacing and transporting the battery 242
Commissioning batteries that are delivered separately 242
Alternating between a lead-acid battery and a lithium-ion battery 243
General information on battery replacement 244
Actuating the battery lock 246
Adjusting the battery lock 247
Special notes for installing the lithium-ion battery 249
Replacing the battery using a lifting device 249
Changing the battery using the internal roller channel (variant) 254
Setting the battery data (lead acid batteries) 259
Transporting the battery using a lifting device (lead acid batteries) 261
Transporting the battery using a lifting device (lithium-ion batteries) 263

Cleaning the truck 264
Cleaning the truck 264

Cleaning the electrical system . . . 267
Cleaning load chains . . . 268
Cleaning panes of glass and mirrors . . . 268
After cleaning . . . 269

Transporting the truck . . . 269
Transportation . . . 269
Crane loading (standard truck with overhead guard) . . . 272
Crane loading (trucks with a cab) . . . 276

Decommissioning . . . 282
Shutting down and storing the truck . . . 282
Re-commissioning after shutdown . . . 283

5 Maintenance

Safety regulations for maintenance . . . 286
General information . . . 286
Working on the hydraulic equipment . . . 286
Working on the electrical equipment . . . 286
Safety devices . . . 287
Set values . . . 287
Lifting and jacking up . . . 287
Working at the front of the truck . . . 288

General maintenance information . . . 289
Personnel qualifications . . . 289
Information for carrying out maintenance . . . 290
Maintenance - 1000 hours/year . . . 293
Maintenance - 3000 hours/every two years . . . 297
Additional maintenance guidelines for using the truck in a cold store - 500 hours or every 12 weeks . . . 297
Ordering spare parts and wearing parts . . . 298
Quality and quantity of the required operating materials . . . 298
Maintenance data table . . . 299

Maintaining operational readiness . . . 300
Checking the driver's seat . . . 300
Maintaining wheels and tyres . . . 301
Checking the hydraulic system for leaks . . . 302
Greasing the lift mast and roller tracks . . . 303
Checking the battery change frame (variant) . . . 303
Replacing the heating system filter for the cab (variant) . . . 304
Maintenance for trucks used in cold stores . . . 305
Maintenance tasks for lithium-ion batteries . . . 305

6 Technical data

Dimensions 308
VDI datasheet for FM-X 10 / Li-ion (N), FM-X 12 / Li-ion (N)* 309
VDI datasheet for FM-X 14 / Li-ion (N, W, EW)* 313
VDI datasheet for FM-X 17 / Li-ion (N, W, EW)* 318
VDI datasheet for FM-X 20 / Li-ion (N, W, EW)* 323
VDI datasheet for FM-X 20 HD / Li-ion* 328
VDI datasheet for FM-X 25 / Li-ion (W, EW)* 332
Wheels and tyres 335
Battery specifications for lithium-ion batteries 336

1

Foreword

Your truck

General

The truck described in these operating instructions corresponds to the applicable standards and safety regulations.

The trucks have been fitted with state-of-the-art technology. All that remains is to handle the truck safely and maintain its functionality.

These operating instructions provide the necessary information to do this. Read and observe the information provided before commissioning the truck. This will prevent accidents and ensure that the warranty remains valid.

CE labelling

The manufacturer uses CE labelling to indicate that the truck complies with the standards and regulations valid at the time of marketing. This is confirmed by the issued EC declaration of conformity. The CE labelling is attached to the nameplate.

An independent structural change or addition to the truck can compromise safety, thus invalidating the EC declaration of conformity.

The EC declaration of conformity must be carefully stored and made available to the responsible authorities.

▷

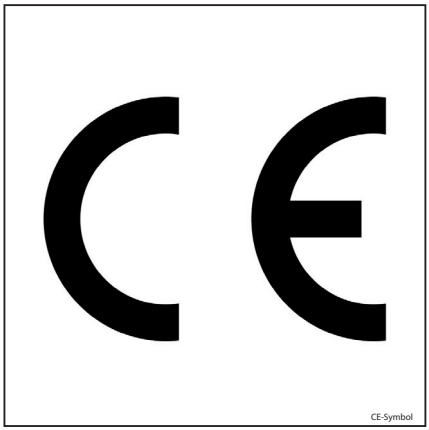

CE-Symbol

EC declaration of conformity in accordance with Machinery Directive

Declaration

STILL GmbH
Berzeliusstraße 10
D-22113 Hamburg Germany

We declare that the

Industrial truck	**according to these operating instructions**
Model	**according to these operating instructions**

conforms to the latest version of the Machinery Directive 2006/42/EC.

Personnel authorised to compile the technical documents:

See EC compliance declaration

STILL GmbH

Accessories

- Key for key switch (2 pieces), not for trucks with the FleetManager™ or "PIN code" variants
- Key for cab (variant)
- Hexagon socket wrench for emergency lowering (in the driver's compartment below the steering wheel)
- Battery change frame (variant)

Labelling points

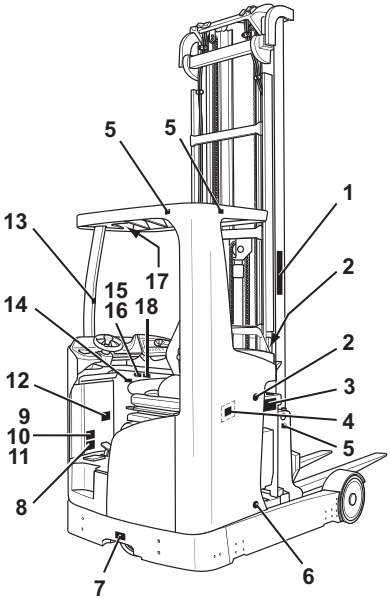

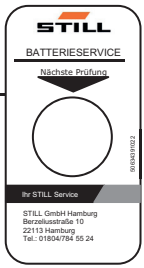

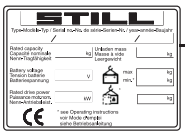

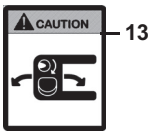

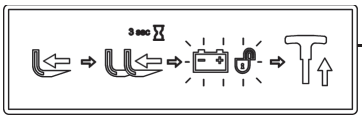

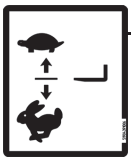

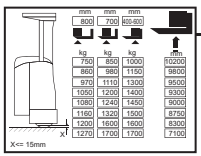

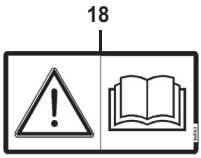

1 Warning sign: Do not place below the fork / Do not place on the fork / Danger due to shearing / Danger due to high fluid pressure
2 Warning sign: Danger due to shearing
3 Decal information: Battery version
4 Decal information: Hydraulic oil tank
5 Decal information: Lifting point
6 Warning sign: Crushing and shearing points on base
7 Decal information: Cold store version (variant)
8 Decal information: Electrical seat adjustment (variant)
9 Decal information: Battery test
10 Decal information: FEM test
11 Decal information: FEM test (inspection sticker)
12 Decal information: Nameplate
13 Decal information: Speed limitation based on lift height
14 Decal information: Unlock the battery
15 Warning sign: Passengers prohibited
16 Warning sign: Reverse steering
17 Decal information: Load capacity diagram, load capacity diagram for attachments (example)
18 Decal information: Caution/Read the operating instructions

Nameplate

The truck can be identified from the information on the nameplate.

The information for the battery weights (5, 6) and the ballast weight (7) only applies to electric forklift trucks.

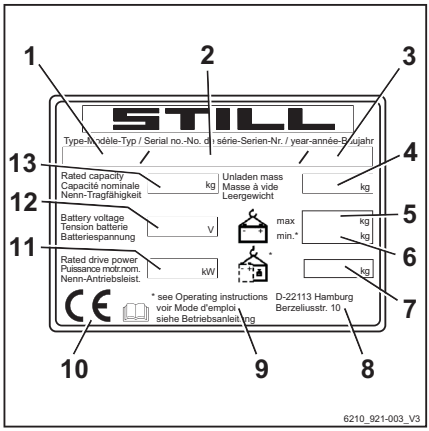

1 Type
2 Production number
3 Year of manufacture
4 Tare weight in kg
5 Max. permissible battery weight in kg
6 Min. permissible battery weight in kg
7 Ballast weight in kg
8 Address of manufacturer
9 Refer to the technical data listed in these operating instructions for more detailed information
10 CE labelling
11 Nominal drive power in kW
12 Battery voltage in V
13 Rated capacity in kg

Production number

NOTE

The production number is used to identify the truck. It can be found on the nameplate and must be referred to in all technical questions.

The production number contains the following coded information:

(1) Production location

(2) Model

(3) Year of manufacture

(4) Sequential number

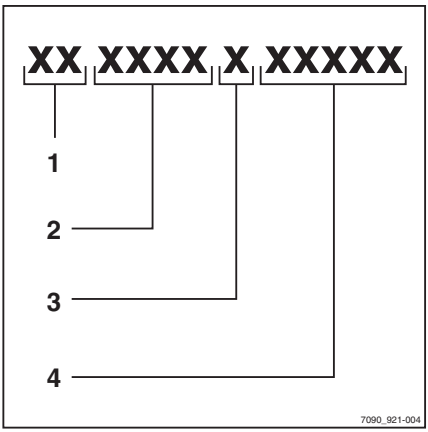

Nameplate of a lithium-ion battery

NOTE

The CE labelling confirms compliance with the EC machinery directive and with all regulations applicable to the lithium-ion battery.

1 Nameplate
2 Manufacturer
3 Address of manufacturer
4 Data/technical data
5 Safety information
6 CE labelling
7 Data matrix code

Transport information

8 "Do not lift in a manner that allows the battery to tilt to one side"
9 "Use a lifting traverse"

General operating notes

10 "Read the operating instructions"
11 "Do not stack"
12 "Do not climb on the battery"
13 "Do not force open"
14 "Do not immerse in water"
15 "Do not throw into fire"

16 "Do not dispose with household waste"
17 "Recycling - recyclable material"

Using the truck

Commissioning

Commissioning is the initial intended use of the truck.

The necessary steps for the commissioning vary depending on the model and equipment of the truck. These steps require preparatory work and adjustment work that cannot be performed by the operating company. See also the chapter entitled "Definition of responsible persons".

– To commission the truck, contact the authorised service centre.

Proper usage

The truck described in these operating instructions is suitable for lifting, transporting and stacking loads.

The truck may only be used for its proper purpose as set out and described in these operating instructions.

If the truck is to be used for purposes other than those specified in the operating instructions, the approval of the manufacturer and, if applicable, the relevant regulatory authorities must be obtained beforehand to prevent hazards.

The maximum load to be lifted is specified on the capacity rating plate (load diagram) and must not be exceeded; see also the chapter entitled "Before picking up a load".

Intended use of the lithium-ion battery (variant)

The lithium-ion battery must only be operated in accordance with these operating instructions and the manufacturer's operating instructions for the battery.

Only lithium-ion batteries approved by STILL for use with this truck may be used. The dimensions of the battery must precisely correspond to the dimensions of the battery frame in the truck. The installation of a smaller battery or a larger battery poses a risk to the stability of the truck.

Only lithium-ion battery chargers approved by STILL for use with this battery may be used.

Impermissible use

The operating company or driver, and not the manufacturer, is liable for any hazards caused by improper use.

NOTE

Please observe the definition of the following responsible persons: "operating company" and "driver".

Use for purposes other than those described in these operating instructions is prohibited.

DANGER

There is a risk of fatal injury from falling off the truck while it is moving!

– It is prohibited to carry passengers on the truck.

The truck may not be operated in areas where there is a risk of fire, explosion or corrosion, or in areas that are particularly dusty.

Stacking or unstacking is not permissible on inclined surfaces or ramps.

Place of use

The truck is only approved for indoor use.

The ground must have an adequate load capacity (concrete, asphalt) and a rough surface. Roadways, working areas and aisle widths must conform to the specifications in these operating instructions; see the chapter entitled "Roadways".

Driving on upward and downward gradients is permitted provided the defined data and specifications are observed; see the chapter entitled "Roadways".

The truck is suitable for use in many different countries, ranging from those situated in the tropics to those in Nordic regions (temperature range: -10°C to +40°C).

If the truck will be used in a cold store, the truck must be configured accordingly and, if necessary, approved for such an environment; refer to the chapter entitled "Cold store application".

The operating company must ensure that sufficient fire protection is available for the relevant application in the truck's surroundings. Depending on the application, additional fire protection must be provided on the truck. If in doubt, contact the relevant authorities.

NOTE

Please observe the definition of the following responsible person: "operating company".

Parking in temperatures below -10°C

CAUTION

Batteries can freeze!

If the truck is parked in an ambient temperature below -10°C for an extended period, the batteries will cool down. The electrolyte may freeze and damage the batteries. The truck is then not ready for operation.

– When the ambient temperature is below -10°C, only park the truck for short periods of time.

Using working platforms

⚠ WARNING

The use of working platforms is regulated by national law. The use of working platforms is only permitted by virtue of the jurisdiction in the country of use.

- Observe national legislation.
- Before using working platforms, consult the national regulatory authorities.

Information about the documentation

Documentation scope

- Original operating instructions
- Original operating instructions for attachments (variant)
- Spare parts list
- Depending on the truck equipment, "UPA" operating instructions may also be provided

NOTE

Refer to the additional information in the section entitled "Rules for the operating company of industrial trucks".

These operating instructions describe all measures necessary for the safe operation and proper maintenance of the truck in all possible variants available at the time of printing. Special versions to meet customer requirements (UPA) are documented in separate operating instructions. If you have any questions, please contact your authorised service centre.

Enter the production number and year of manufacture from the nameplate in the space provided:

Production number: _____

Year of manufacture: _____

Please quote the production number in all technical enquiries.

Each truck comes with a set of operating instructions. These instructions must be stored carefully and must be available to the driver and operating company at all times. The storage location is specified in the chapter entitled "Overviews".

If the operating instructions are lost, the operating company must obtain a replacement from the manufacturer immediately.

The operating instructions are included in the spare parts list and can be reordered as a spare part.

The personnel responsible for operating and maintaining the equipment must be familiar with these operating instructions.

The operating company must ensure that all users have received, read and understood these operating instructions.

Safely store the complete documentation and pass on to the subsequent operating company when transferring or selling the truck.

NOTE

Please observe the definition of the following responsible persons: "operating company" and "driver".

Thank you for reading and complying with these operating instructions. If you have any questions or suggestions for improvements, or if you have found any errors, please contact the authorised service centre.

Supplementary documentation

Unlike the standard equipment and the variants, this truck may be fitted with **unpla**nned equipment (**UPA**).

This UPA may be, for example:

- Special sensors
- Special attachments
- Towing devices
- Customer-specific attachments

In this case, the truck is supplied with additional documentation. This may be in the form of an insert or separate operating instructions.

The original operating instructions for this truck are valid for the operation of standard equipment and variants without restriction. The operational and safety information in the original operating instructions continues to be valid in its entirety, unless it is countermanded in this additional documentation.

The requirements for the qualification of personnel as well as the time for maintenance may vary. This is defined in the additional documentation.

– If you have any questions, please contact your authorised service centre.

Issue date and topicality of the operating instructions

The issue date of these operating instructions can be found on the title page.

STILL is constantly engaged in the further development of trucks. These operating instructions are subject to change, and any claims based on the information and/or illustrations contained in them cannot be asserted.

Please contact your authorised service centre for technical support relating to your truck.

Copyright and trademark rights

These instructions must not be reproduced, translated or made accessible to third parties—including as excerpts—except with the express written approval of the manufacturer.

Explanation of information symbols used

⚠ DANGER

Indicates procedures that must be strictly adhered to in order to prevent the risk of fatalities.

⚠ WARNING

Indicates procedures that must be strictly adhered to in order to prevent the risk of injuries.

⚠ CAUTION

Indicates procedures that must be strictly adhered to in order to prevent material damage and/or destruction.

NOTE

For technical requirements that require special attention.

ENVIRONMENT NOTE

To prevent environmental damage.

List of abbreviations

NOTE

This list of abbreviations applies to all types of operating instructions. Not all of the abbreviations that are listed here will necessarily appear in these operating instructions.

Abbreviation	Meaning	Explanation
ABE	Display operating unit	
ArbSchG	Arbeitsschutzgesetz	German implementation of EU occupational health and safety directives
Betr-SichV	Betriebssicherheitsverordnung	German implementation of the EU working equipment directive
BG	Berufsgenossenschaft	German insurance company for the company and employees
BGG	Berufsgenossenschaftlicher Grundsatz	German principles and test specifications for occupational health and safety
BGR	Berufsgenossenschaftliche Regel	German rules and recommendations for occupational health and safety
DGUV	Berufsgenossenschaftliche Vorschrift	German accident prevention regulations
CE	Communauté Européenne	Confirms conformity with product-specific European directives (CE mark)
CEE	Commission on the Rules for the Approval of the Electrical Equipment	International commission on the rules for the approval of electrical equipment
DC	Direct Current	Direct current
DFÜ	Datenfernübertragung	Remote data transmission
DIN	Deutsches Institut für Normung	German standardisation organisation
EG	European Community	
EN	European standard	
FEM	Fédération Européene de la Manutention	European Federation of Materials Handling and Storage Equipment
F_{max}	maximum Force	Maximum power

Abbreviation	Meaning	Explanation
GAA	Gewerbeaufsichtsamt	German authority for monitoring/issuing regulations for worker protection, environmental protection, and consumer protection
GPRS	General Packet Radio Service	Transfer of data packets in wireless networks
ID no.	ID number	
ISO	International Organization for Standardization	International standardisation organisation
LAN	Local Area Network	Local area network
K_{pA}	Uncertainty of measurement of sound pressure levels	
LED	Light Emitting Diode	Light emitting diode
L_p	Sound pressure level at the workplace	
L_{pAZ}	Average continuous sound pressure level in the driver's compartment	
LSP	Load centre of gravity	Distance of the centre of gravity of the load from the front face of the fork backs
MAK	Maximum workplace concentration	Maximum permissible air concentrations of a substance at the workplace
Max.	Maximum	Highest value of an amount
Min.	Minimum	Lowest value of an amount
PIN	Personal Identification Number	Personal identification number
PPE	Personal protective equipment	
SE	Super-Elastic	Superelastic tyres (solid rubber tyres)
SIT	Snap-In Tyre	Tyres for simplified assembly, without loose rim parts
StVZO	Straßenverkehrs-Zulassungs-Ordnung	German regulations for approval of vehicles on public roads
TRGS	Technische Regel für Gefahrstoffe	Ordinance on hazardous materials applicable in the Federal Republic of Germany
VDE	Verband der Elektrotechnik Elektronik Informationstechnik	German technical/scientific association
VDI	Verein Deutscher Ingenieure	German technical/scientific association
VDMA	Verband Deutscher Maschinen- und Anlagenbau e.V.	German Mechanical Engineering Industry Association
WLAN	Wireless LAN	Wireless local area network

Defining directions

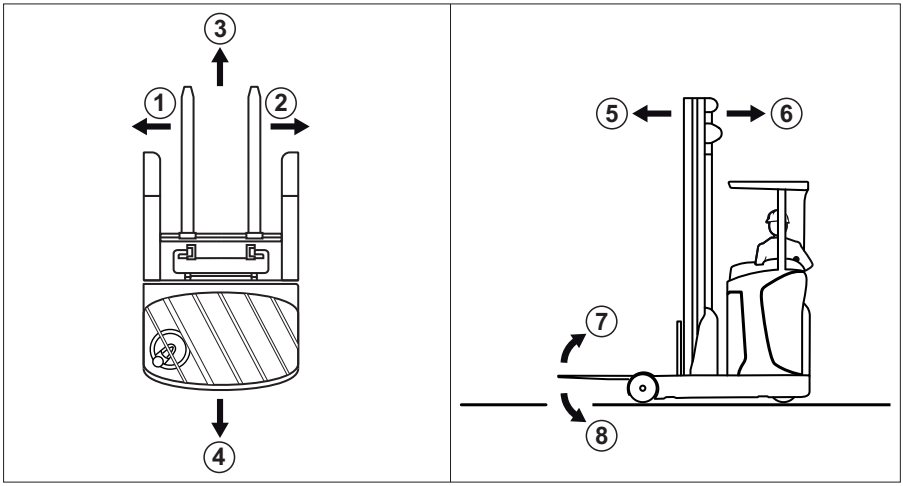

General:

- left (1)
- right (2)

Drive directions:

- Travelling in the load direction (backwards) (3)
- Travelling in the drive direction (forwards) (4)

Movements of the reach carriage:

- Extending the reach carriage (in the load direction) (5)
- Retracting the reach carriage (in the drive direction) (6)

Tilting the lift mast or fork:

- Backward tilt (7)
- Forward tilt (8)

The driver sits crosswise to the drive direction.

Schematic views

View of functions and operating procedures

At many points in this documentation, the operation of certain functions or operating procedures is explained. To illustrate these operations, schematic views of a reach truck are used.

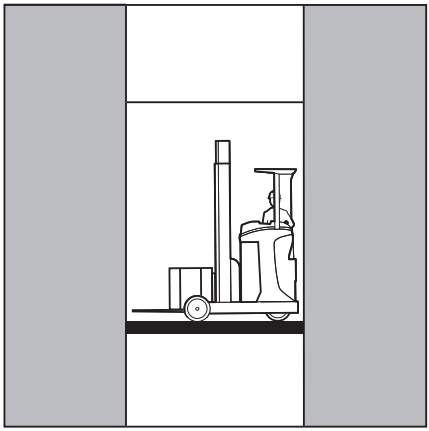

NOTE

These schematic views are not representative of the structural state of the documented truck. The views are used solely for the purpose of clarifying procedures.

View of the display-operating unit

NOTE

Views of operating statuses and values on the display-operating unit are examples and partly dependent on the equipment on the truck. As a result, the displays shown of the actual operating statuses and values may vary.

Environmental considerations

Packaging

During delivery of the truck, certain parts are packaged to provide protection during transport. This packaging must be removed completely prior to initial start-up.

ENVIRONMENT NOTE

The packaging material must be disposed of properly after delivery of the truck.

Disposal of components and batteries

The truck is composed of different materials. If components or batteries need to be replaced and disposed of, they must be:

- disposed of,
- treated or
- recycled in accordance with regional and national regulations.

NOTE

The documentation provided by the battery manufacturer must be observed when disposing of batteries.

ENVIRONMENT NOTE

We recommend working with a waste management company for disposal purposes.

2

Safety

Definition of responsible persons

Operating company

The operating company is the natural or legal person or group who operates the truck or on whose authority the truck is used.

The operating company must ensure that the truck is only used for its proper purpose and in compliance with the safety regulations set out in these operating instructions.

The operating company must ensure that all users read and understand the safety information.

The operating company is responsible for the scheduling and correct performance of regular safety checks.

We recommend that the national performance specifications are adhered to.

Specialist

A qualified person is defined as a service engineer or a person who fulfils the following requirements:

- A completed vocational qualification that demonstrably proves their professional expertise. This proof should consist of a vocational qualification or a similar document.
- Professional experience indicating that the qualified person has gained practical experience of industrial trucks over a proven period during their career During this time, this person has become familiar with a wide range of symptoms that require checks to be carried out, such as based on the results of a hazard assessment or a daily inspection
- Recent professional involvement in the field of the industrial truck test in question and an appropriate further qualification are essential. The qualified person must have experience of carrying out the test in question or of carrying out similar tests. Moreover, this person must be aware of the latest technological developments

regarding the industrial truck to be tested and the risk being assessed

Drivers

This truck may only be driven by suitable persons who are at least 18 years of age, have been trained in driving, have demonstrated their skills in driving and handling loads to the operating company or an authorised representative, and have been specifically instructed to drive the truck. Specific knowledge of the truck to be operated is also required.

The training requirements under §3 of the Health and Safety at Work Act and §9 of the plant safety regulations are deemed to have been satisfied if the driver has been trained in accordance with BGG (General Employers' Liability Insurance Association Act) 925. Observe the national regulations for your country.

Driver rights, duties and rules of behaviour

The driver must be trained in his rights and duties.

The driver must be granted the required rights.

The driver must wear protective equipment (protection suit, safety footwear, safety helmet, industrial goggles and gloves) that is appropriate for the conditions, the job and the load to be lifted. Solid footwear should be worn to ensure safe driving and braking.

The driver must be familiar with the operating instructions and have access to them at all times.

The driver must:

- have read and understood the operating manual
- have familiarised himself with safe operation of the truck
- be physically and mentally able to drive the truck safely

DANGER

The use of drugs, alcohol or medications that affect reactions impair the ability to drive the truck!

Individuals under the influence of the aforementioned substances are not permitted to perform work of any kind on or with the truck.

Prohibition of use by unauthorised persons

The driver is responsible for the truck during working hours. He must not allow unauthorised persons to operate the truck.

When leaving the truck, the driver must secure it against unauthorised use, e.g. by pulling out the key.

Basic principles for safe operation

Insurance cover on company premises

In many cases, company premises are restricted public traffic areas.

NOTE

The business liability insurance should be reviewed to ensure that, in the event of any damage caused in restricted public traffic areas, there is insurance cover for the truck in respect of third parties.

Special notes when using lithium-ion batteries (variant)

If this truck is equipped with a lithium-ion battery (variant) rather than a conventional lead acid battery, the following special notes apply for the operating company and driver.

DANGER

Risk of explosion!

Heating to over 80°C, mechanical stress and incorrect use may cause the battery to explode.

- Never heat the battery to over 80°C or expose it to a naked flame.
- Do not subject the battery to excessive mechanical loads.
- Do not climb on the battery.
- Avoid impacts.
- Do not open the battery.
- Never short-circuit the battery connectors.
- Do not connect the battery with the polarity reversed.

Product-specific dangers posed by the lithium-ion battery

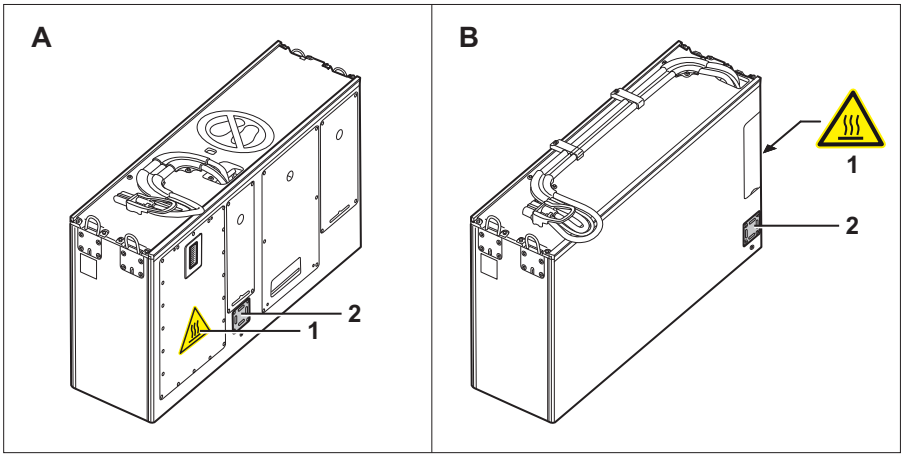

Lithium-ion battery

A	Battery group 4.1
B	Battery group 4.2, 4.3
1	Hot area on the brake resistor (position depends on the battery group; observe the warning sign ⚠)
2	Safety valve (position depends on the battery group)

⚠ WARNING

Risk of burns due to hot surfaces!

The battery has an integrated brake resistor that can heat up to over 100°C during operation.

It can take several hours for the brake resistor to cool down to a safe temperature.

– Do not touch the hot area (1).

The position of the brake resistor depends on the battery model. Observe the position of the warning sign.

⚠ WARNING

Risk of injury!

Risk of injury if the safety valve (2) trips!

– Leave the area around the battery immediately. Maintain a minimum distance of 5 m.

NOTE

The brake resistor (1) is installed differently depending on the battery group. The build-up of heat in the area around the brake resistor is harmless. The safety valve (2) opens when the battery is subjected to over pressure or catches fire.

All lithium-ion batteries are associated with the risk of a fire starting, of the battery exploding and of the battery causing chemical burns.

When used as intended, no hazardous substances escape from the closed tray and contact with toxic substances will not occur. There is a risk of contact only in the event of incorrect use (mechanical, thermal, electrical) that leads to activation of the safety valve or to the housing cracking. As a result, the electrolyte fluid may leak out, the electrode material may react with humidity/water, or battery venting/a fire/or an explosion can occur, depending on the surrounding circumstances. The position of the safety valve (2) on the battery depends on the battery group.

Touching live components can lead to an electric shock, which can have thermal or paralysing effects. The latter can cause ventricular fibrillation, cardiac arrest or respiratory paralysis, leading to death.

If a battery combusts, the resulting smoke or vapours can cause irritation of the eyes, skin and respiratory system.

Permissible lithium-ion batteries

- Use only lithium-ion batteries that have been approved by STILL for use with this truck. The dimensions of the battery must precisely correspond to the dimensions of the battery frame in the truck. The installation of a smaller battery or a larger battery poses a risk to the stability of the truck.
- In addition, follow the operating instructions provided by the battery manufacturer. The lithium-ion battery must only be operated

in accordance with the manufacturer's operating instructions for the battery.

Declaring the use of lithium-ion batteries

The health and safety representative and the workforce must also be informed that trucks with lithium-ion batteries are being used.

We recommend that the operating company informs the local fire brigade of the planned use of trucks fitted with lithium-ion batteries.

Hazard assessment

In accordance with §3 of the German Ordinance on Industrial Safety and Health (BetrSichV), the operating company is obliged to perform a separate hazard assessment in order to assess the risks posed to the company by lithium-ion batteries.

– Observe the national regulations for the country in which the truck is being used.

Driver qualification

The following qualification requirements for the driver are in addition to the conditions described in the chapter entitled "Definition of responsible persons" ("Driver" section):

- The driver must be trained in the operation of the lithium-ion battery
- Only trained drivers may drive these trucks

Procedure in the event of a fire

Damaged lithium-ion batteries pose an increased fire hazard. In the event of a fire, large quantities of water are the best way to cool the battery.

– Evacuate the location of the fire as quickly as possible.

– Ventilate the location of the fire well, as the resulting combustion gases can cause damage to health if inhaled.

– Inform the fire brigade that lithium-ion batteries are affected by the fire.

– Observe the information provided by the battery manufacturer regarding the procedure in the event of a fire.

Water can be used to cool down an incipient fire.

Transportation

Transporting the lithium-ion battery outside the premises may require a special transportation container.

– Contact your authorised service centre for more information.

Changes and retrofitting

If the truck is to be used for work that is not listed in the directives or in these instructions, the truck can be converted or retrofitted for this purpose. Please note that any structural modification may impair the driving behaviour and stability of the truck, and can result in accidents.

You must therefore contact your authorised service centre prior to making any modifications or engaging in any such work.

Changes that will adversely affect stability, load capacity, safety systems etc. must not be made without the manufacturer's approval.

The truck may only be converted with written approval from the manufacturer. Approval from the relevant authority must be obtained where applicable.

In addition, changes to the brakes, steering, control elements, circumferential view, equipment variants (e.g. attachments) must not be made without the prior written approval of the manufacturer.

⚠ DANGER

There is a risk of accident due to restricted visibility. Additional attachments (e.g. terminals, printers, mirrors) in the driver's compartment area can restrict the driver's field of vision.

– Only install attachments (variants) that have been specifically approved by STILL in accordance with the safety regulations.

When carrying out welding work on the truck, it is essential that the battery and all connections to the electronic control cards are disconnected. Contact the authorised service centre on this matter.

In the event of the manufacturer going into liquidation and the company not being taken over by another legal person, the operating company can make changes to the truck.

To do so, the operating company must fulfil the following prerequisites:

Design documents, test documents and assembly instructions associated with the change must be archived and remain accessible at all times.

The capacity rating plate, decal information, hazard warnings and the operating instructions must be checked to ensure they are consistent with the changes and modified if required.

The modification must be designed, checked and implemented by a design office that specialises in industrial trucks in accordance with the standards and directives valid at the time the modification is made.

Decal information with the following data must be permanently affixed to the truck so that it is clearly visible:

- Type of modification
- Date of modification
- Name and address of the company implementing the modification.

Modifications to the overhead guard and cabs

⚠ DANGER

Work on the overhead guard or on the weather protection cab/cold store cab reduces its stability. A falling load or the truck tipping over can cause the modified chassis, bodywork and fittings to fail. There is a risk of fatal injury!

- Do not weld on the overhead guard or the weather protection cab/cold store cab.
- Do not drill on the overhead guard or the weather protection cab/cold store cab.
- Do not make any incisions on the overhead guard or the weather protection cab/cold store cab.

⚠ DANGER

Risk of explosion from additional bores on the truck chassis, weather protection cab or cold store cab!

Explosive gases can escape and lead to potentially fatal injuries if they explode. Sealing bores with plugs is not sufficient to prevent gas from escaping.

- Do not drill any additional holes in the truck chassis, weather protection cab or cold store cab.

Roof loads

⚠ CAUTION

Additional roof loads impair the overhead guard or the weather protection cab/cold store cab.

- Do not mount any additional roof loads on the truck.

Seat belt

The truck may be equipped with a safety belt for the driver only after consultation with the authorised service centre.

⚠ CAUTION

Trucks with an electrical adjustment mechanism for the driver's compartment (variant) must not be equipped with a safety belt for the driver.

Safety information for FM-X Wide, Extra Wide (W, EW)

The W (Wide) and EW (Extra Wide) versions differ from the standard truck by having additional cover sheets (1) between the overhead guard and the widened chassis. These sheets are located on each side of the truck. They are not designed to be walked on by people.

▷

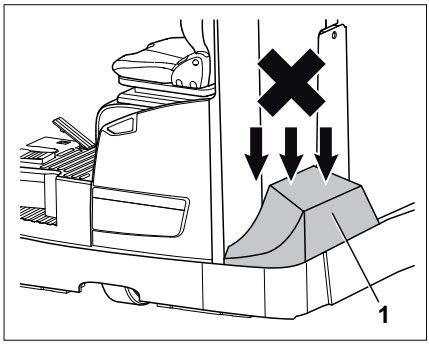

⚠ WARNING

Risk of accident if a person steps on to the lateral cover sheets

If a person steps on to the cover plates, the plates can be damaged by the weight of the person, who may also slip and suffer injury.

– Do not step on the lateral cover sheets

Warning regarding non-original parts

Original parts, attachments and accessories are specially designed for this truck. We specifically draw your attention to the fact that parts, attachments and accessories supplied by other companies have not been tested and approved by STILL.

⚠ CAUTION

Installation and/or use of such products may therefore have a negative impact on the design features of the truck and thus impair active and/or passive driving safety.

We recommend that you obtain approval from the manufacturer and, if necessary, from the relevant regulatory authorities before installing such parts. The manufacturer accepts no liability for any damage caused by the use of non-original parts and accessories without approval.

Damage, defects and misuse of safety systems

Damage or other defects on the truck or attachment must be reported to the supervisor or responsible fleet manager immediately so that they can have the defect rectified.

Trucks and attachments that are not functional or safe to drive may not be used until they have been properly repaired.

Do not remove or deactivate safety systems and switches.

Fixed set values may only be changed with the approval of the manufacturer.

Work on the electrical system (e.g. connecting a radio, additional headlights etc.) is only permitted with the manufacturer's written approval. All electrical system interventions must be documented.

Even if they are removable, roof panels may not be removed, as they are designed to protect against small falling objects.

Wheels and tyres

⚠ DANGER

Risk to stability!

Failure to observe the following information and instructions can lead to a loss of stability. The truck may tip over — risk of accident!

The following factors can lead to a loss of stability and are therefore **prohibited**:

- Wheels not approved by the manufacturer
- Excessive wear to the tyres
- Tyres of inferior quality
- Changes to the wheel rims
- Combination of wheels from different manufacturers

The following rules must be observed to ensure stability:

- Only use wheels with equal and permitted levels of wear to the tyres.
- Only use tyres of the original tyre type.

- Only use wheels approved by the manufacturer.
- Only use high-quality products.

When changing wheels, always ensure that this does not cause the truck to tilt to one side (e.g. always replace right and left wheels at the same time). Changes must only be made following consultation with the manufacturer.

Wheels approved by the manufacturer can be found on the spare parts list. If other wheels are to be used, authorisation from the manufacturer must be obtained beforehand.

– Contact your authorised service centre regarding this matter.

Medical equipment

⚠ WARNING

Electromagnetic interference may occur on medical devices!

Only use equipment that is sufficiently protected against electromagnetic interference.

Medical equipment, such as pacemakers or hearing aids, may not work properly when the truck is in operation.

– Ask your doctor or the manufacturer of the medical equipment to confirm that the medical equipment is sufficiently protected against electromagnetic interference.

Exercise caution when handling gas springs and accumulators

⚠ WARNING

Gas springs are under high pressure. Improper removal results in an elevated risk of injury.

For ease of operation, various functions on the truck can be supported by gas springs. Gas springs are complex components that are subject to high internal pressures (up to 300 bar). They may under no circumstances be opened unless instructed to do so, and may be installed only when not under pressure. If required, the authorised service centre will depressurise the gas spring in accordance with the regulations before removal. Gas springs must be depressurised before recycling.

- Avoid damage, lateral forces, buckling, temperatures over 80°C and heavy contamination.
- Damaged or defective gas springs must be changed immediately.
- Contact the authorised service centre.

⚠ WARNING

Accumulators are under high pressure. Improper installation of an accumulator results in an elevated risk of injury.

Before starting work on the accumulator it must be depressurised.

- Contact the authorised service centre.

Length of the fork arms

⚠ DANGER

Risk of accident due to the incorrect selection of fork arms!

- The fork arms must match the depth of the load.

If the fork arms are too short, the load may fall off the arms after it has been picked up. In addition, be aware that the load centre of gravity may shift as a result of dynamic forces, such as braking. A load that is otherwise resting safely on the fork arms may move forwards and fall.

If the fork arms are too long, they can catch on loading units behind the load that is to be

picked up. These other loading units then fall over when the load is raised.

– For help with selecting the correct fork arms, contact the authorised service centre.

Residual risk

Residual dangers, residual risks

Despite careful working and compliance with standards and regulations, the occurrence of other risks when using the truck cannot be entirely excluded.

The truck and all other system components comply with current safety requirements. Nevertheless, even when the truck is used for its proper purpose and all instructions are followed, some residual risk cannot be excluded.

Even beyond the narrow danger areas of the truck itself, a residual risk cannot be excluded. Persons in this area around the truck must exercise a heightened degree of awareness, so that they can react immediately in the event of any malfunction, incident or breakdown etc.

⚠ WARNING

All persons that are in the vicinity of the truck must be instructed regarding these risks that arise through use of the truck.

In addition, we draw attention to the safety regulations in these operating instructions.

Risks can include:

- Escape of consumables due to leakages, rupture of lines and containers etc.
- Risk of accident when driving over difficult ground such as gradients, smooth or irregular surfaces, or with poor visibility etc.
- Falling, tripping etc. when moving on the truck, especially in wet weather, with leaking consumables or on icy surfaces
- Fire and explosion risks due to batteries and electrical voltages
- Human error resulting from failure to observe the safety regulations,
- Unrepaired damage or defective and worn components,
- Insufficient maintenance and testing
- Use of incorrect consumables
- Exceeding test intervals

The manufacturer is not held responsible for accidents involving the truck caused by the failure of the operating company to comply with these regulations either intentionally or carelessly.

Stability

The stability of the truck has been tested to the latest technological standards and is guaranteed provided that the truck is used properly and according to its intended purpose. These standards only take into account the dynamic and static tipping forces that can arise during specified use in accordance with the operating rules and intended purpose. However, the danger of exceeding the moment of tilt due to improper use or incorrect operation and losing stability can never be excluded.

The loss of stability can be avoided or minimised by the following actions:

- Always secure the load against slipping, e.g. by lashing.
- Always transport unstable loads in suitable containers.
- Always drive slowly when cornering.
- Drive with the load lowered.
- Even with sideshifts, align the load as centrally as possible with the truck and transport in this position.
- Avoid turning and diagonally driving across slopes or gradients.
- Never have the load facing downhill when travelling on slopes or gradients.
- Pick up only loads of the approved width.
- Always take great care when transporting suspended loads.
- Do not drive over ramp edges or steps.

Special risks associated with using the truck and attachments

Approval from the manufacturer and attachment manufacturer must be obtained each

time the truck is used in a manner that falls outside the scope of normal use, and in cases where the driver is not certain that he can use the truck correctly and without the risk of accidents.

Overview of hazards and counter-measures

NOTE

This table is intended to help evaluate the hazards in your facility and applies to all drive types. It does not claim to be complete.

– Observe the national regulations for the country in which the truck is being used.

Hazard	Measure	Check note √ Complete - Not applicable	Notes
Truck equipment does not comply with local regulations	Test	O	If in doubt, consult competent factory inspectorate or employers' liability insurance association
Lack of skills and qualification of driver	Driver training (sit-on and stand-on)	O	BGG 925 VDI 3313 driver permit
Usage by unauthorised persons	Access with key only for authorised persons	O	
Truck not in a safe condition	Recurrent testing and rectification of defects	O	German Ordinance on Industrial Safety and Health (BetrSichV)
Risk of falling when using working platforms	Compliance with national regulations (different national laws)	O	German Ordinance on Industrial Safety and Health (BetrSichV) and employer's liability insurance associations
Impaired visibility due to load	Resource planning	O	German Ordinance on Industrial Safety and Health (BetrSichV)
Contamination of respiratory air	Assessment of diesel exhaust gases	O	Technical Regulations for Hazardous Substances (TRGS) 554 and the German Ordinance on Industrial Safety and Health (BetrSichV)
	Assessment of LPG exhaust gases	O	German threshold limit values list (MAK-Liste) and the German Ordinance on Industrial Safety and Health (BetrSichV)

Hazard	Measure	Check note √ Complete - Not applicable	Notes
Impermissible usage (improper usage)	Issuing of operating instructions	O	German Ordinance on Industrial Safety and Health (BetrSichV) and German Health and labour protection law (ArbSchG)
	Written notice of instruction to driver	O	German Ordinance on Industrial Safety and Health (BetrSichV) and German Health and labour protection law (ArbSchG)
	Note the German Ordinance on Industrial Safety and Health (BetrSichV), the operating instructions and the German Engineering Federation (VDMA) rules	O	
When fuelling			
a) Diesel	Note the German Ordinance on Industrial Safety and Health (BetrSichV), the operating instructions and the German Engineering Federation (VDMA) rules	O	
b) LPG	Note German Social Accident Insurance (DGUV) regulation D34, the operating instructions and the German Engineering Federation (VDMA) rules	O	

Hazard	Measure	Check note √ Complete - Not applicable	Notes
When charging the traction battery	Note the German Ordinance on Industrial Safety and Health (BetrSichV), the operating instructions and the German Engineering Federation (VDMA) rules	O	Association for Electrical, Electronic and Information Technologies (VDE) regulation 0510: In particular - Ensure adequate ventilation - Insulation value within the permissible range
When using battery chargers	Note the German Ordinance on Industrial Safety and Health (BetrSichV), employers' liability insurance association regulation 104 and the operating instructions	O	German Ordinance on Industrial Safety and Health (BetrSichV) and employers' liability insurance association regulation 104
When parking LPG trucks	Note the German Ordinance on Industrial Safety and Health (BetrSichV), employers' liability insurance association regulation 104 and the operating instructions	O	German Ordinance on Industrial Safety and Health (BetrSichV) and employers' liability insurance association regulation 104
With driverless transport systems			
Roadway quality inadequate	Clean/clear driveways	O	German Ordinance on Industrial Safety and Health (BetrSichV)
Load carrier incorrect/slipped	Reattach load to pallet	O	German Ordinance on Industrial Safety and Health (BetrSichV)
Drive behaviour unpredictable	Employee training	O	German Ordinance on Industrial Safety and Health (BetrSichV)
Driveways blocked	Mark driveways Keep driveways clear	O	German Ordinance on Industrial Safety and Health (BetrSichV)
Driveways intersect	Announce right-of-way rule	O	German Ordinance on Industrial Safety and Health (BetrSichV)
No person detection during depositing and retrieval	Employee training	O	German Ordinance on Industrial Safety and Health (BetrSichV)

Danger to employees

According to the German Ordinance on Industrial Safety and Health (BetrSichV) and labour protection law (ArbSchG), the operating company must determine and assess hazards during operation, and establish the labour protection measures required for employees (BetrSichVO). The operating company must therefore draw up appropriate operating instructions (§ 6 ArbSchG) and make them available to the driver. A responsible person must be appointed.

NOTE

Please observe the definition of the following responsible persons: "operating company" and "driver".

The construction and equipment of the truck correspond to the Machinery Directive 2006/42/EC and are therefore marked with CE labelling. These elements are therefore not included in the hazard assessment. Attachments possess their own CE labelling and likewise are not included for that reason. The operating company must, however, select the type and equipment of the trucks so as to comply with the local provisions for deployment.

The result must be documented (§ 6 ArbSchG). In the case of truck applications involving similar hazard situations, the results may be summarised. This overview (see chapter "Overview of hazards and countermeasures") provides help on complying with this regulation. The overview specifies the main hazards that are the most frequent cause of accidents in the event of non-compliance. If other major operational hazards are involved, they must also be taken into consideration.

The conditions of use for trucks are broadly similar in many plants, so the hazards can be summarised in one overview. Observe the information provided by the relevant employers' liability insurance association on this subject.

Safety tests

Carrying out regular inspections on the truck

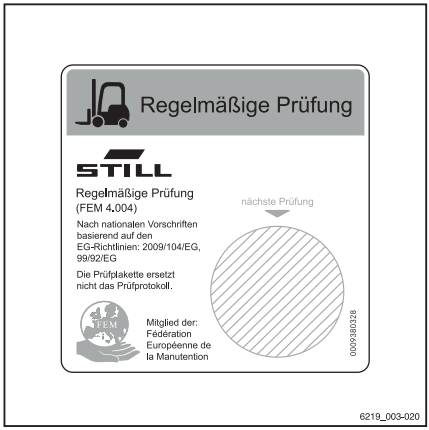

The operating company must ensure that the truck is checked by a specialist at least once a year or after particular incidents.

As part of this inspection, the technical condition of the truck must be completely tested with regard to accident safety. In addition, the truck must be thoroughly checked for damage that may have been caused by improper use. A test log must be created. The results of the inspection must be retained at least until a further two inspections have been carried out.

The inspection date is indicated by an adhesive label on the truck.

– Arrange for the authorised service centre to perform regular testing on the truck.

– Observe the guidelines for tests carried out on the truck in accordance with FEM 4.004.

The operating company is responsible for ensuring that any defects are remedied without delay.

– Notify your authorised service centre.

NOTE

In addition, observe the national regulations for the country of use.

Insulation testing

The insulation of the truck must have sufficient insulation resistance. For this reason, insulation testing in accordance with DIN EN 1175 and DIN 43539, VDE 0117 and VDE 0510 must be conducted at least once yearly as part of the FEM testing.

The insulation testing results must be at least the test values given in the following two tables.

– For insulation testing, contact the authorised service centre.

The exact procedure for this insulation testing is described in the workshop manual for this truck.

NOTE

The truck's electrical system and drive batteries must be checked separately.

Test values for the drive battery

Component	Recommended test voltage	Measurements		Nominal voltage U_{Batt}	Test values
Battery	50 VDC	Batt+ Batt-	Battery tray	24 volts	> 1200 Ω
	100 VDC			48 volts	> 2400 Ω
	100 VDC			80 volts	> 4000 Ω

Test values for the entire truck

Nominal voltage	Test voltage	Test values for new trucks	Minimum values over the duration of the service life
24 volts	50 VDC	Min. 50 kΩ	> 24 kΩ
48 volts	100 VDC	Min. 100 kΩ	> 48 kΩ
80 volts	100 VDC	Min. 200 kΩ	> 80 kΩ

Safety regulations for handling consumables

Permissible consumables

DANGER

Failure to observe the safety regulations relating to consumables may result in a risk of injury, death or damage to the environment.

– Observe the safety regulations when handling these materials.

Refer to the maintenance data table for information regarding the permissible substances that are necessary for operation (refer to the chapter entitled "Maintenance data table").

Oils

DANGER

Oils are flammable!

- Follow the statutory regulations.
- Do not allow oils to come into contact with hot engine parts.
- No smoking, fires or naked flames!

DANGER

Oils are toxic!

- Avoid contact and consumption.
- If vapour or fumes are inhaled, move to fresh air immediately.
- In the event of contact with the eyes, rinse thoroughly (for at least 10 minutes) with water and then consult an eye specialist.
- If swallowed, do not induce vomiting. Seek immediate medical attention.

WARNING

Prolonged intensive contact with the skin can result in dryness and irritate the skin!

- Avoid contact and consumption.
- Wear protective gloves.
- After any contact, wash the skin with soap and water, and then apply a skin care product.
- Immediately change soaked clothing and shoes.

WARNING

There is a risk of slipping on spilled oil, particularly when combined with water!

- Spilt oil should be removed immediately with oil-binding agents and disposed of according to the regulations.

ENVIRONMENT NOTE

Oil is a water-polluting substance!

- *Always store oil in containers that comply with the applicable regulations.*
- *Avoid spilling oils.*
- *Spilt oil should be removed immediately with oil-binding agents and disposed of according to the regulations.*
- *Dispose of old oils according to the regulations.*

Hydraulic fluid

WARNING

These fluids are pressurised during operation of the truck and are hazardous to your health.

- Do not spill the fluids.
- Follow the statutory regulations.
- Do not allow the fluids to come into contact with hot engine parts.

WARNING

These fluids are pressurised during operation of the truck and are hazardous to your health.

- Do not allow the fluids to come into contact with the skin.
- Avoid inhaling spray.
- Penetration of pressurised fluids into the skin is particularly dangerous if these fluids escape at high pressure due to leaks in the hydraulic system. In case of such injury, immediate medical assistance is required.
- To avoid injury, use appropriate personal protective equipment (e.g. protective gloves, industrial goggles, skin protection and skin care products).

ENVIRONMENT NOTE

Hydraulic fluid is a water-polluting substance.

- *Always store hydraulic fluid in containers that comply with regulations*
- *Avoid spills*
- *Spilt hydraulic fluid should be removed immediately with oil-binding agents and disposed of according to the regulations*
- *Dispose of old hydraulic fluid according to the regulations*

Battery acid

WARNING

Battery acid contains dissolved sulphuric acid. This is toxic.

- Avoid touching or swallowing the battery acid at all costs.
- In case of injury, seek medical advice immediately.

WARNING

Battery acid contains dissolved sulphuric acid. This is corrosive.

- When working with battery acid, use appropriate PSA (rubber gloves, apron, protection goggles).
- When working with battery acid, never wear a watch or jewellery.
- Do not allow any acid to get onto clothing or skin or into the eyes. If this does happen, rinse immediately with plenty of clean water.
- In case of injury, seek medical advice immediately.
- Immediately rinse away spilt battery acid with plenty of water.
- Follow the statutory regulations.

ENVIRONMENT NOTE

- Dispose of used battery acid in line with the applicable regulations.

Brake fluid

WARNING

Brake fluid is poisonous!

- Avoid swallowing. In the event of swallowing, do not induce vomiting. Rinse out your mouth thoroughly with water and ask a doctor for advice.
- Avoid aerosolisation and inhalation. In the event of inhalation, seek fresh air. Ask a doctor for advice if necessary.

WARNING

Brake fluid is hazardous to your health!

Brake fluid irritates the eyes and can dry out the skin upon prolonged contact.

- Coat your hands with a protective skin cream prior to starting work.
- Avoid prolonged or intensive skin contact. In the event of skin contact, clean the wetted skin with water and soap, and subsequently apply a skin care product.
- Prevent contact with the eyes. In the event of contact with the eyes, wash out the affected eye(s) with clean water for ten minutes and then ask a doctor for advice.
- Change clothing soiled with brake fluid as soon as possible.

CAUTION

Brake fluid is flammable!

- Do not allow brake fluid to come into contact with hot motor parts.
- Smoking, fires and naked flames are prohibited.

CAUTION

Brake fluid has strong dissolving and colour-changing properties.

- Immediately rinse off any brake fluid that has splashed on paint, clothing, and shoes with plenty of water

ENVIRONMENT NOTE

Brake fluid is a water pollutant!

- *Always store brake fluid in containers complying with the regulations..*
- *Do not spill brake fluid.*
- *Spilt brake fluid must be removed immediately using an oil binding agent and disposed of in accordance with regulations*
- *Dispose of old brake fluid according to the regulations.*
- *Observe the national regulations for the country in which the truck is being used.*

Disposal of consumables

ENVIRONMENT NOTE

Materials that accumulate during repair, maintenance and cleaning must be collected properly and disposed of in accordance with the national regulations for the country in which the truck is being used. Work must only be carried out in areas designated for the purpose. Care must be taken to minimise any environmental pollution.

– Soak up any spilt fluids such as hydraulic oil, brake fluid or gearbox oil using an oil-binding agent.

– Neutralise any spilt battery acid immediately.

– Always observe national regulations concerning the disposal of used oil.

Commissioning the FleetManager™ (variant)

Activating the access control after delivery of the truck

⚠ CAUTION

Danger associated with use by unauthorised persons

The FleetManager™ regulates the access authorisation to the truck. To activate the access control, the FleetManager must be put into operation immediately following delivery. This ensures that only persons authorised by the operating company have access to the truck.

If the FleetManager is not put into operation immediately after delivery, the operator must convert the truck to a different access control.

- Put the FleetManager™ into operation immediately after delivery. Make the truck accessible only to people who are authorised by the operating company.
- In order to convert the truck to a different access control, contact your authorised service centre.

The FleetManager™ regulates the access authorisation to the truck via a PIN code, access chip or access card. This means that the truck is effectively protected against unauthorised access. The system can only be activated at the customer's premises, as it uses essential customer data. Therefore, at the time of delivery, the truck is not protected against unauthorised use.

In order to guarantee protection, the FleetManager™ must be put into operation immediately after delivery. The operating company is responsible for ensuring that only authorised personnel use the truck.

If the operating company decides not to use the FleetManager™ at a later date, the operating company is responsible for the conversion of the truck to a different access control.

Emissions

The values specified apply to a standard truck (compare the specifications in the "Technical data" chapter). Different tyres, lift masts,

additional units etc. may produce different values.

Noise emissions

The values were determined using the measuring procedures from the EN 12053 standard (noise measurement for industrial trucks based on EN 12001 and EN ISO 3744 and the requirements of EN ISO 4871).

This machine emits the following sound pressure level:

Continuous sound pressure level in the driver's compartment

L_{pAZ}
< 69.5 dB(A)

The values were determined in the test cycle on an identical machine from the weighted values for operating statuses and idling.

Time proportions:

- Lifting 18%
- Idling 58%
- Driving 24%

However, the noise levels indicated on the truck cannot be used to determine the noise emissions at workplaces according to the most recent version of **Directive 2003/10/EC** (daily personal noise pollution). If necessary, these noise emissions must be determined by the operating company directly at the workplaces under the actual conditions there (additional noise sources, special application conditions, sound reflections).

NOTE

Please observe the definition of the following responsible person: "operating company".

Vibrations

The vibrations of the machine have been determined on an identical machine in accordance with the standards DIN EN 13059 "Safety of industrial trucks - Test methods for measuring vibration" and DIN EN 12096

"Mechanical vibration - Declaration and verification of vibration emission values".

Weighted effective value of acceleration to which the body (feet or seat base) is subjected.	Uncertainty of measurement K
0.39 m/s^2	0.117 m/s^2

Tests have indicated that the amplitude of the hand and arm vibrations on the steering wheel or the operating devices in trucks is less than 2.5 m/s^2. There are therefore no measurement guidelines for these measurements.

The personal vibration load on the driver over a working day must be determined in accordance with **Directive 2002/44/EC** by the operating company at the actual place of use, in order to consider all additional influences, such as driving route, intensity of use etc.

Battery

⚠ DANGER

Risk of explosion due to flammable gases!

During charging, lead-acid batteries release a mixture of oxygen and hydrogen (oxyhydrogen gas). This gas mixture is explosive and must not be ignited.

- Make sure that there is always sufficient ventilation in working areas that are entirely or partially enclosed.
- Keep away from open flames and flying sparks.
- Do not smoke.
- Observe the safety regulations for handling the battery.

Radiation

In accordance with the guidelines DIN EN 62471:2009-03 (VDE 0837-471:2009-03), the STILL SafetyLight (variant) is assigned to risk group 2 (medium risk) due to its photobiological hazard potential.

3

Overviews

Overview

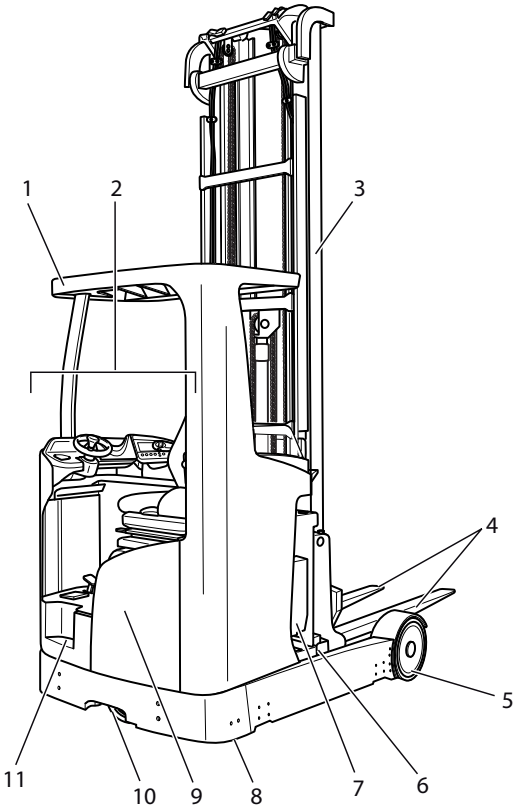

1	Overhead guard	7	Battery
2	Driver's compartment	8	Side support (tilt protection)
3	Lift mast	9	Control compartment
4	Fork arms	10	Drive wheel
5	Load wheel	11	Step
6	Battery frame		

NOTE

The truck equipment may differ from the equipment shown.

Overview of the driver's compartment

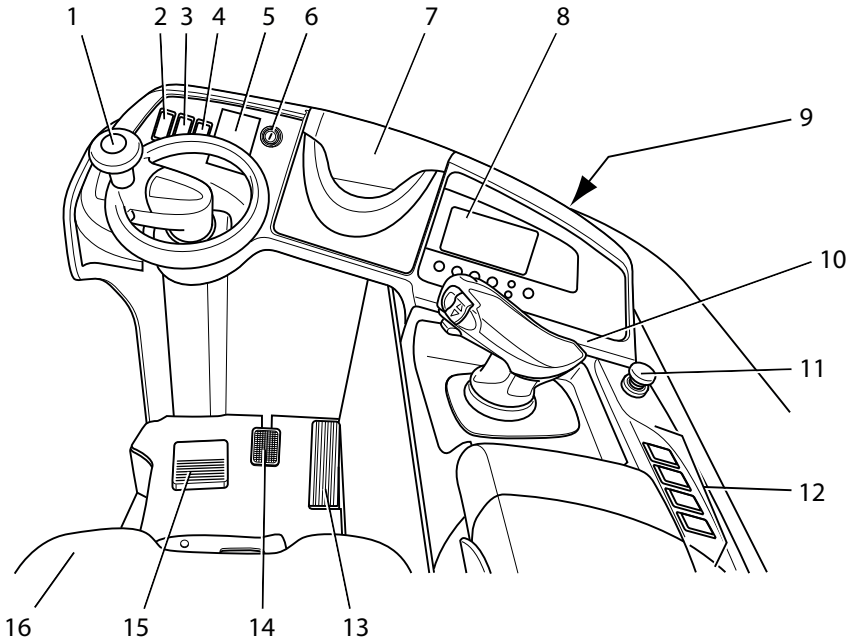

1	Steering wheel
2	Button for speed limitation, creep speed (variant)
3	Electrical seat adjustment push button (variant)
4	Working spotlight push button (variant)
5	Card reader or keypad for enabling the truck (variant)
6	Key switch or push button (variant)
7	Compartment (reserved for add-on systems)
8	Display and operating unit
9	Cup holder for max. 1.5-l bottles
10	Operating devices for hydraulic and traction functions
11	Emergency off switch
12	Push button for additional hydraulic functions
13	Accelerator pedal
14	Brake pedal
15	Foot switch
16	Driver's seat

NOTE

The truck equipment may differ from the equipment shown.

Shelves and cup holders

▷

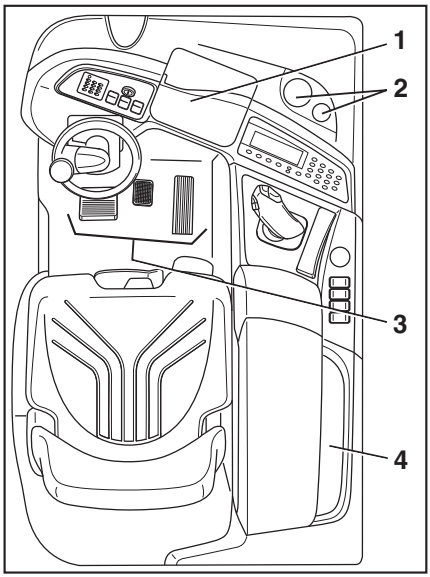

⚠ WARNING

Objects may fall into the footwell and obstruct the pedals, which poses a risk of accident!

Objects to be stored must be of the correct size so that they do not fall from the shelves (1, 4) or out of the cup holder (2). Objects that fall into the footwell during travel as a result of steering or braking can slip between the pedals (3) and stop them working correctly. Subsequently, it may not be possible to brake the truck when necessary.

– Bottles of 1.5 l or smaller may be stored in the cup holder.
– Make sure that stored objects cannot fall from the shelves when the truck is started up, steered or braked.

Operating devices and display elements

Display and operating unit

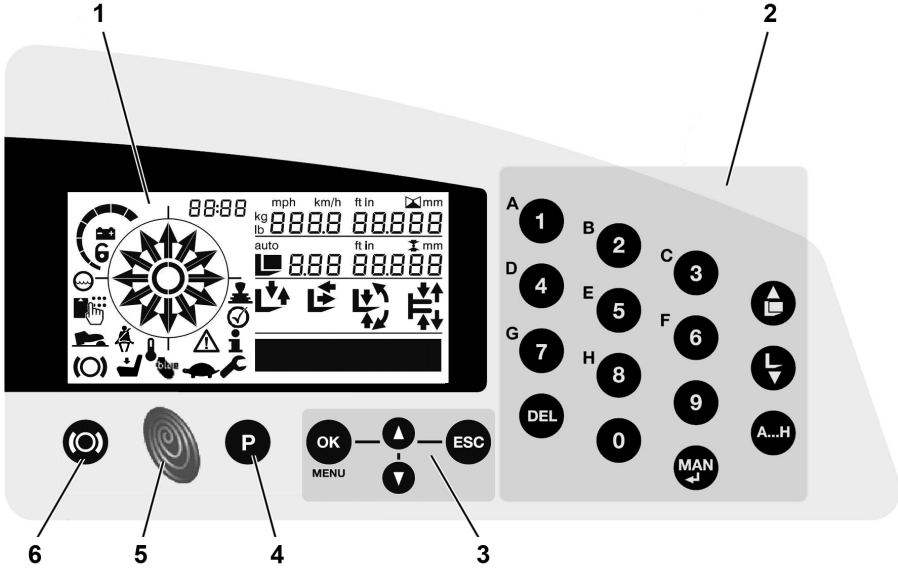

1 Display of the operating statuses
2 Keypad for lift height preselection (variant) or PIN code access (variant)
3 Keypad for onboard diagnostics, parameterising
4 Drive programme button (P1-P4)
5 Blue-Q button
6 Parking brake button

Operating status displays on the display and operating unit

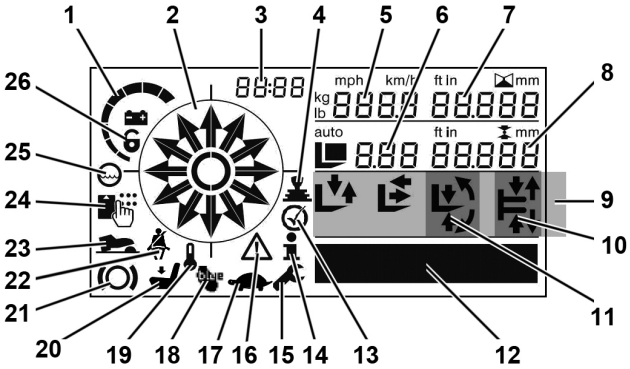

Item no.	Display	Comment
1	Battery charging state	As the capacity decreases, the individual segments go out one after the other. If the permissible discharge level is reached so that the battery's residual capacity is 20% of the nominal capacity, only the last segment will still flash. A hydraulic limitation and/or driving limitation can be implemented as an option. The hydraulic limitation and/or driving limitation must be activated by the authorised service centre.
2	Steering angle display combined with drive direction	-
3	Time display (digital)	-
4	Joystick 4Plus (operating error)	-
5	Multifunction indicator	Display is dependent on truck parameters (e.g. driving speed, reach position, lift height)
6	Display field for the selected default setting for the lift height preselector	Display is only active in the "lift height preselector" variant
7	Display field for the current height in the main lift	Display is only active in the "lift height preselector" variant or "lift height display" variant
8	Display field for the "target difference" or display of the stored lift height value during teach-in for the lift height preselector	"Target difference" is only active in the "lift height preselector" variant or "lift height display" variant
9	Function assistant	Relevant only for the "lift height preselec-tor" variant

Item no.	Display	Comment
10	Function assistant, centre position for transition shift	-
11	Function assistant, centre position for tilting	-
12	Operating hours, error messages, drive profile, information text	The meter displays up to 99,999.9 operating hours.
13	Acknowledge button	Actuation required for further functioning
14	Information	-
15	Maintenance expired	-
16	Caution	Displayed together with an error message (FE)
17	Creep speed activated	-
18	Blue-Q activated	-
19	Overtemperature	-
20	Driver's seat not occupied during operation of the truck (seat switch)	-
21	Parking brake activated	-
22	Seat belt on driver's seat not fastened (not series production truck)	-
23	Foot switch required	-
24	Symbol for FleetManager variant or PIN code access variant	-
25	Battery water level display too low (variant)	-
26	Battery not locked	-

Display messages

Event-related operating information and malfunctions are shown in the display field (2). In addition, the "Caution"symbol (1) lights up if there is a malfunction.

Messages are always shown periodically and for a certain period of time, according to the event.

In the case of successive events, the respective messages are displayed one after another on the display.

After a few seconds, the display will alternate between the last shown operating display and the message.

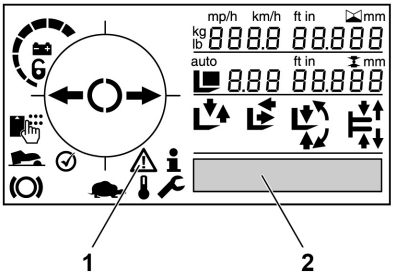

– If a message appears, follow these operating instructions.

Once the event is remedied, the message will disappear.

Messages for the driver appear in the display together with the symbol "i" for information. ▷

General messages

Text message/error number	Description	Remedy
CLEAN HEIGHT SENSOR	Contamination will affect the measuring signal between the LED height sensor and reflector.	• Clean the sensor glass and the reflector. Observe the information in the chapter entitled "Cleaning the optical height measuring system". • Check the light signal path between the sensor and the reflector. Remove obstacles. Then fully lower the fork to reference the system. • If the message is still displayed after cleaning, contact your authorised service centre.
EMERGENCY SWITCH	• Emergency off switch of the truck is actuated • All truck functions are disabled	Switch off the truck. Unlock the emergency off switch. Switch the truck on again.
EMERGENCY OPERATION	• Only for trucks with FleetManager™ (variant) • Truck functions are restricted	• Check the FleetManager™ documentation. • The truck can be operated in emergency operation without access authorisation. • To eliminate the cause, contact the authorised service centre.
BATTERY CARRIER MODE ACTIVE	The driver has activated the battery carrier.	If the battery carrier has been accidentally actuated: Fully push in the reach carriage with the battery.
ℹ 0300 / 0301	• Intermediate lift or end lift limitation is active after switching on • "Lift" truck function is disabled	Execute the "Lower" truck function.

Text message/error number	Description	Remedy
0640	Shock recognition of the FleetManager™ (variant) has detected a shock event (e.g. collision of the truck).	Reset the shock recognition with the FleetManager master chip.
3009	The driver actuates the brake pedal and accelerator pedal simultaneously.	Do not actuate the brake pedal and accelerator pedal at the same time.
A3035	• Brake fluid level is too low • The truck only drives at creep speed (1.6 km/h) • Brake fluid leaks may cause failure of the hydraulic brake	Contact your authorised service centre.

Messages relating to the lithium-ion battery

Text message/error number	Description	Remedy
801	• Short-term overload of the lithium-ion battery • Traction dynamics and hydraulic speed are restricted	• Move the joystick 4Plus / fingertip switch to the inactive position for 2 seconds
	• Lithium-ion battery is in emergency operation • Driving speed and hydraulic speed may be restricted	• Switch off the truck • If the message is still displayed after restarting, contact your authorised service centre
802	• Messages relating to the lithium-ion battery • Battery service required • Driving speed and hydraulic speed may be restricted	Contact your authorised service centre.
803	• Overtemperature of the lithium-ion battery • Driving speed and hydraulic speed may be restricted • In the event of severe overtemperature, the battery switches off	• Switch off the truck • Allow the battery to cool down • If the message is still displayed after restarting, contact your authorised service centre
S5950	• Messages relating to the lithium-ion battery • All truck functions are disabled	Contact your authorised service centre.

Text message/error number	Description	Remedy
S5951	• No communication with the lithium-ion battery • All truck functions are disabled	• Check the battery cable and battery plug • Restart the truck • If the message is still displayed after restarting, contact your authorised service centre
S5961	• Overtemperature of the lithium-ion battery • All truck functions are disabled	• Switch off the truck • Allow the battery to cool down • If the message is still displayed after restarting, contact your authorised service centre
S5962	• Insufficient temperature of the lithium-ion battery • All truck functions are disabled	• Observe the permissible ambient temperature for the battery • Switch off the truck • If the message is still displayed after restarting, contact your authorised service centre
S6620	• Internal error in the lithium-ion battery • All truck functions are disabled	• Restart the truck • If the message is still displayed after restarting, contact your authorised service centre
S5970	• Lithium-ion battery reports a shock event (vibration) • All truck functions are disabled	• Restart the truck • If the message is still displayed after restarting, contact your authorised service centre

Entering truck operating data via the display and operating unit

Authorisation levels

The authorisation levels determine which operating data and functions the user can access. The higher the authorisation level, the more comprehensive the access to truck operating data.

The display and operating unit is used to access operating data at three authorisation levels:

- Level 1 (driver)
- Level 2 (fleet manager)
- Level 3 (authorised service centre)

The access rights are predefined ex works within the different authorisation levels. Individual access rights can be moved to a higher authorisation level.

Level 1 (driver)

Access:	Press the OK button for two seconds
Authorisations:	Set the time (can be moved to a higher authorisation level) Set the date (can be moved to a higher authorisation level) Set the language (can be moved to a higher authorisation level)

Level 2 (fleet manager)

Access:	Press OK and ESC for 4 seconds and enter the password for level 2
Authorisations:	Battery - Type - Capacity Read out the software and hardware status Read out the error memory Toggle the units Teach-in the lift height preselector (can be moved to a higher authorisation level)

Level 3 (authorised service centre)

Access:	Press OK and ESC for 4 seconds and enter the password for level 3
Authorisations:	Maintenance interval
	PIN for remote data transfer via SIM card
	Delete error list

Accessing the main menu without a password (authorisation level 1)

First of all, press the OK button to open the main menu at authorisation level 1.

– Press OK for two seconds

The main menu for authorisation level 1 appears on the display and operating unit.

Accessing the main menu with a password (authorisation levels 2 and 3)

First of all, press the OK and ESC buttons to open the input screen for the password at the required authorisation level.

– Press OK and ESC for four seconds

The display and operating unit shows the input screen for the password. The first input position flashes.

```
PASSWORD
____
```

A valid password consists of four digits from 0 to 9.

– Edit the digits one at a time using the arrow buttons. Press the OK button to confirm each of the individual digits and access the next digit

Once the last digit has been confirmed by pressing the OK button, the password is checked.

If the password is correct, the main menu for the required authorisation level appears on the display and operating unit.

If the password is invalid, a corresponding message appears on the display and operating unit.

PASSWORD
NOT VALID

The message appears for three seconds and then the display and operating unit shows the input screen for the password again. The password can be entered again.

If the password is entered incorrectly a third time, the input screen is locked for five minutes. A corresponding message appears on the display and operating unit.

PASSWORD	
DENIED	5 min

The message appears for three seconds and then the display and operating unit shows the input screen for the password again. If the password is entered again during the locked period, the password is always rejected. The remaining time for the locked period is displayed.

Once the locked period has elapsed, the password may be entered a further three times.

Entering operating data in the main menu

The menus on the display and operating unit are controlled using the OK button (1), ESC button (3) and arrow buttons (2).

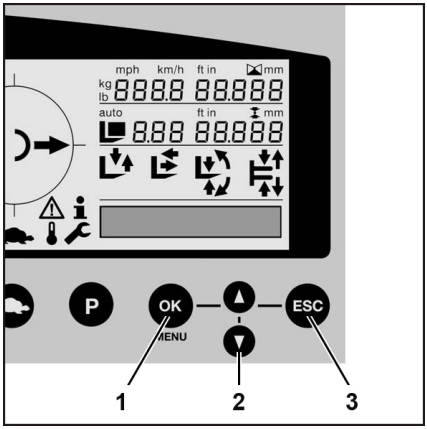

- Press the arrow buttons to navigate through the menus
- Press the OK button to select a menu item
- Press the ESC button to move up the menu structure

If a displayed value or status can be edited, the corresponding display flashes.

- Press the arrow buttons to edit a value or status
- Briefly press the ESC button to return to the previous input position (to make a correction)
- Press and hold the ESC button for two seconds to cancel the current entry
- Press the OK button to confirm the entry

Overview of the menu structure

Authori-sation (level)			Main menu	Submenu			Edit/select	Comment
1	2	3	CONFIGU-RATION	1	2	3		
			LANGUAGE				List of available languages	Language selection for the display and operating unit
			TIME				HH : MM	
			DATE				YY : MM : DD	
			BATTERY	TYPE			LEAD CSM GEL GEL_SO SPEC. 1 SPEC. 2	
				CAPACITY			XXX Ah	
			VERSION	DEVICE			X	
					COMPUTER		X	

Authori-sation (level)			Main menu	Submenu			Edit/select	Comment
1	2	3	CONFIGU-RATION	1	2	3		
						HW1 HW2 SW1 SW2 SW3	VX.XX	
			UNITS	DISTANCE			km miles	
				LOAD			kg lb	
			ERROR LIST	MODE			CUSTOMER SERVICE	
					DEVICE		X	A–Z, *: all devices
						TYPE	X	0: current error 1: since reset 2: since deletion
							X XX XX	Error e.g. A 12 12
			ADJUST					Teach-in Lift heights
			SERVICE IN				XXX h	
			ERROR RESET					A–Z, *: all devices

Lithium-ion battery display

The lithium-ion battery has its own display. The display shows information about the error status (1), the temperature (2) and the charging status (3) of the lithium-ion battery.

– See the "Display" chapter in the operating instructions provided by the battery manufacturer, "BMZ".

▷

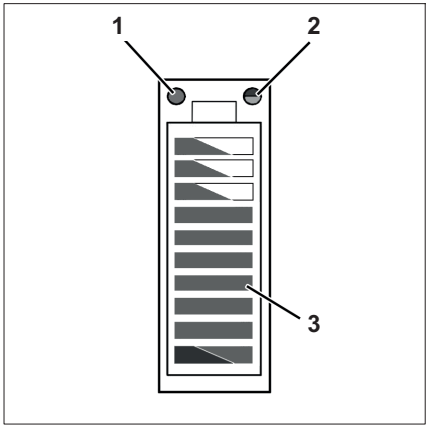

1 Service LED (red)
2 Temperature LED (yellow/red)
3 Charge state LEDs (red/green)

Operating devices for hydraulic and traction functions

Different versions of the operating devices are available for operating the truck's hydraulic and traction functions. The truck can be equipped with the following operating devices:

- **Joystick 4Plus**
- **Fingertip**

Joystick 4Plus

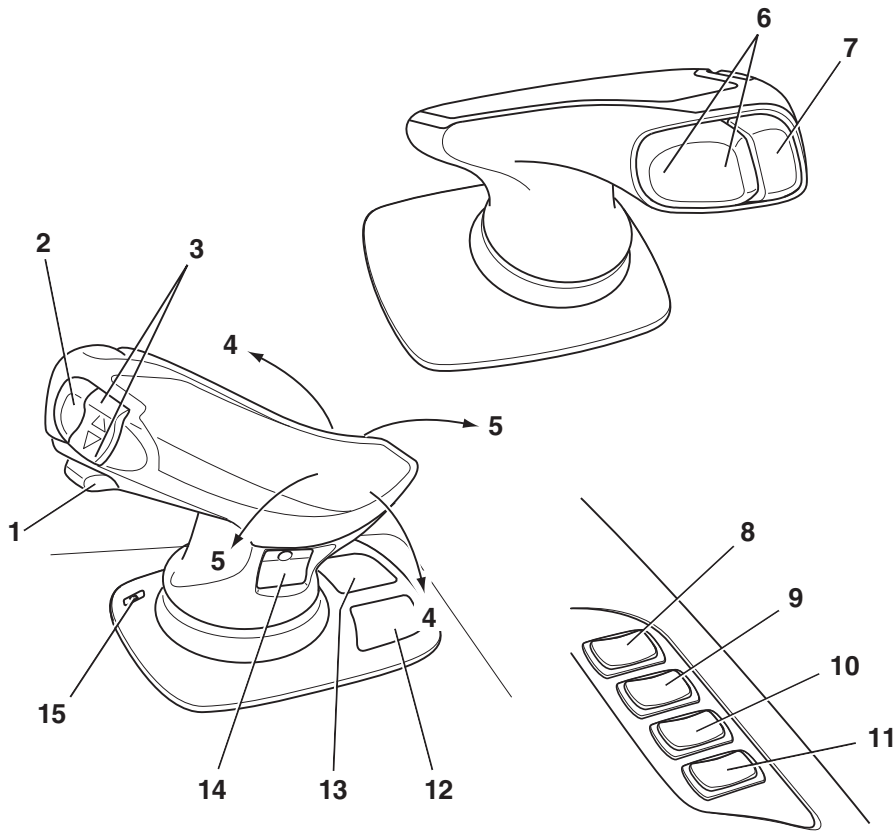

1	"Transition shift" slider	10	"Transition shift/tilt centre position" push button (variant)
2	Shift button "F" (auxiliary hydraulics controller)	11	Reserve
3	Drive direction switch	12	Pictograms for operation of the 5th and 6th hydraulic function (variant)
4	Joystick, "lifting/lowering" function	13	Pictograms for operation of the basic hydraulic functions
5	Joystick, "shifting" function	14	Pictograms for operation of the 3rd and 4th hydraulic function
6	"Tilt" rocker button	15	LED indicator light for clamp locking mechanism (variant)
7	Signal horn button		
8	"Enable" push button (variant)		
9	"Load measurement" push button (variant)		

Fingertip

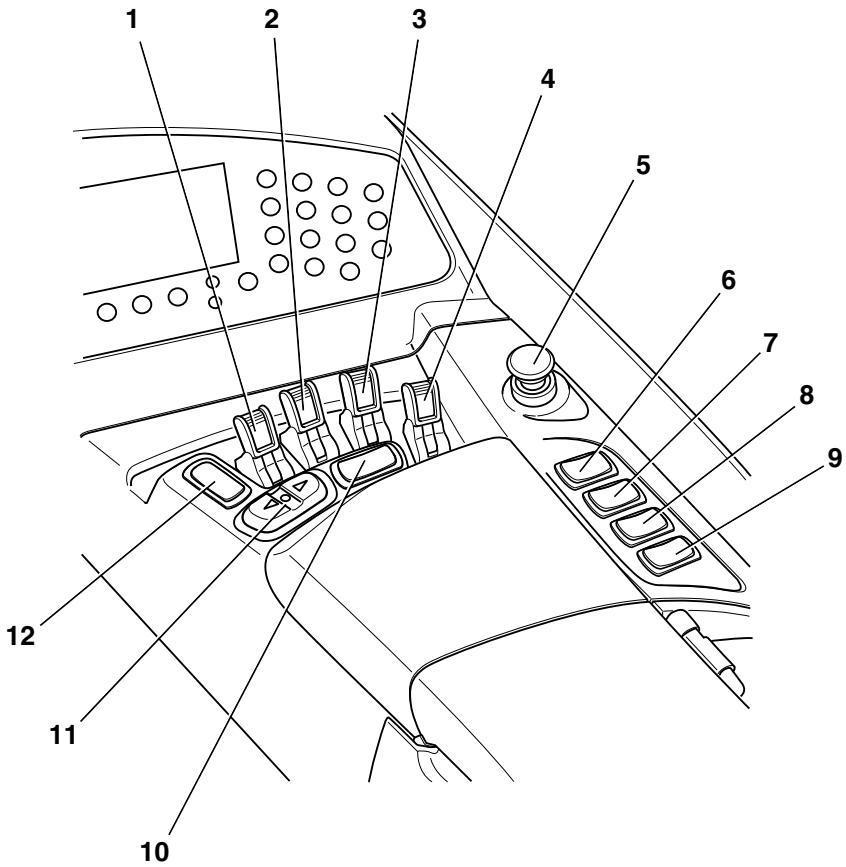

1	"Lift/lower" operating lever	8	"Transition shift/tilt centre position" push button (variant)
2	"Shift" operating lever	9	Reserve
3	"Tilt" operating lever	10	"Auxiliary hydraulics" push button (variant)
4	"Transition shift" operating lever	11	Drive direction switch
5	Emergency off switch	12	Signal horn button
6	"Enable" push button (variant)		
7	"Load measurement" push button (variant)		

4

Operation

Testing and activities before daily use

Visual inspections and function checking

DANGER

Risk of explosion if hydrogen builds up in the cab!

If the truck is equipped with a cab, hydrogen from the battery compartment can ingress into the cab through unsealed bores. A build-up of hydrogen can lead to an explosion.

There must be no unsealed bores in the cab wall. Sealing bores with plugs is not sufficient to prevent gas from entering.

– Have unused bores in the cab wall sealed by the authorised service centre.

WARNING

Risk of accident due to damage or other defects on the truck or on the attachment (variant)!

Damage to the truck or the attachment (variant) can lead to unpredictable and dangerous situations.

– Do not remove or deactivate safety systems or switches.
– Do not change any predefined set values.
– Do not use the truck until it has been properly repaired.

WARNING

Risk of falling when working on high parts of the truck.

– Use only the steps provided on the truck.
– Do not use any truck components as mounting aids or platforms.
– Use suitable equipment.

▷

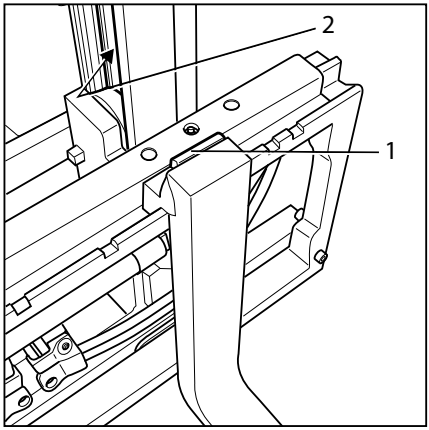

Load lift system unit

⚠ CAUTION

Risk of component damage!

A deformed or damaged battery male connector can cause overheating and related consequential damage.

- Check the battery male connector for damage.
- If necessary, have the battery male connector replaced by the authorised service centre.

To ensure that the truck is operated safely, the visual inspections and function checking must be carried out before daily use. The components that must be checked and their check points are listed in the following table.

If damage or other defects are identified on the truck or the attachment (variant) during the following inspections, the truck must not be used until it has been properly repaired. Damage or other defects must be reported to the supervisor or the responsible fleet manager immediately so that repairs by the authorised service centre can be arranged.

Ensure that the truck is safe for operation each day before it is used:

Component	Course of action
Fork arms, general lifting accessories	Perform a visual inspection for deformation and wear (for example, bent, broken, significant wear). Check the condition and function of fuses (1) to prevent lifting and shifting.
Roller tracks (2)	Make sure that there is a film of grease.
Load chains	Perform a visual inspection to ensure that the chains are intact and have adequate and even tension.
Attachments (variant)	Ensure correct mounting in accordance with the operating instructions of the manufacturer. Perform a visual inspection to ensure the attachments are intact and not leaking. Perform checks to ensure the attachments are working correctly.
Load measurement	Perform the load measurement once for testing purposes.
Lift and tilt cylinders, tank, valve block, hoses, pipes, connections	Perform a visual inspection for damage and leakages. Have damaged components replaced by the authorised service centre.
Underside	Check the area under the truck for leaking consumables.

Component	Course of action
Wheels, tyres	Perform a visual inspection for wear and damage. Make sure that only approved tyre types are used (see the chapter entitled " Technical data/Wheels and tyres"). In the event of uneven tyre wear on the load wheels, change both tyres. Observe the safety regulations in the chapter entitled "Tyres".
Overhead guard, guard grille (variant)	Perform a visual inspection for integrity. Check for secure mounting.
Weather protection cab, cold store cab	Perform a visual inspection for integrity. Check for secure mounting.
Steps	Make sure they are clean (free of ice, not slippery).
Panes of glass	Perform a visual inspection for integrity. Make sure they are clean (also free of ice).
Handholds	Check for secure mounting.
Battery lock	Check the battery lock on the internal roller channel (variant) for condition and function. Close the battery lock.
Battery frame	Perform a visual inspection for integrity (e.g. cracks or breaks). Check that the battery frame is fully retracted towards the drive side and is securely locked in this position.
Battery connection assembly	Perform a visual inspection for integrity and deformation. Check the contacts. Inspect the battery male connector and the plug connection for foreign objects that may have become lodged and for moisture. Remove such deposits, for example with compressed air. Have damaged battery male connectors replaced by the authorised service centre.
Covers	Visual inspection: all covers must be fitted and closed.
Labelling, adhesive label	Check that labels are present and intact/legible. Replace damaged or missing adhesive labels in accordance with the chapter entitled "Labelling points".
Lighting, warning units (e.g. signal horn)	Check the integrity and function.

Component	Course of action
Antistatic belt, corona electrode	Perform a visual inspection for integrity. Ensure cleanliness. Make sure that the antistatic belt is still long enough to touch the ground. The discharge wires of the corona electrode must not touch the ground. The wires discharge the energy to the air.
Slide tracks of the reach carriage	Make sure that a film of grease is present on the slide tracks of the reach carriage.
Gearbox	Make sure that no consumables are escaping from the gearbox.

- Do not use the truck if there is any damage or defects.
- In this case, contact your authorised service centre.

Any other necessary tasks are summarised under their own headings, e.g. adjusting the driver's seat.

Climbing into and out of the truck

⚠ WARNING

Risk of injury when climbing into and out of the truck due to slipping or becoming stuck!

If the footwell cover is very dirty, smeared with oil or iced over, there is a risk of slipping. There is a risk of getting caught by your clothing when climbing out of the truck.

- Make sure that the step and the footwell of the driver's compartment have a non-slip surface and are not iced over.
- Do not wear loose-fitting workwear.
- Do not jump into or out of the truck.
- Ensure that you have a secure grip on the truck.

⚠ WARNING

Risk of injury when jumping out of the truck!

If the driver jumps out the truck while it is moving, he or she could fall under the truck or be crushed by an obstacle.

If the driver's clothing or jewellery (watch, ring etc.) become stuck on components, this can lead to serious injuries, e.g. from falling, loss of fingers.

- Only climb into or out of the truck when the truck is at a standstill.
- Do not jump out of the truck.
- Do not wear jewellery at work.
- Do not wear loose-fitting workwear.

⚠ CAUTION

Components may become damaged through incorrect use!

Truck components, such as the driver's seat, steering wheel, parking brake lever etc., are not designed to be used for climbing in and out of the truck and may be damaged due to misuse.

- Only use the fittings specifically designed for the purpose of climbing into and out of the truck.

The truck must be at a standstill when climbing into or out of the truck. To assist with climbing into and out of the truck, the footwell must be used as a step (4) and the handle (1) must be used for support. The post of the overhead guard (2) can also be used for support. ▷

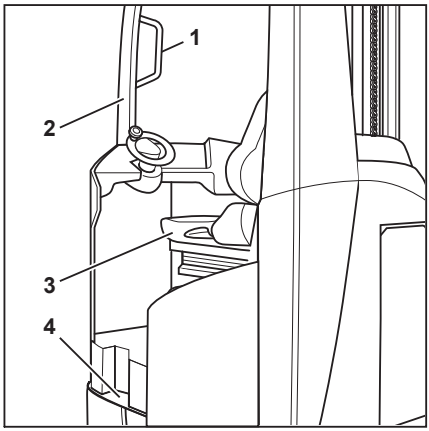

Always climb into the truck forwards:

- Grip the handle (1) with your left hand and hold on.
- Put your left foot on the step (4).
- Climb into the truck with your right foot first and sit down on the driver's seat (3).

Always climb out of the truck backwards:

- Grip the handle (1) with your left hand and hold on.
- Stand up from the driver's seat and place your left foot on the step (4).
- Climb out of the truck right foot first.

Adjusting the MSG 65/MSG 75 driver's seat

⚠ WARNING

Risk of accident from sudden adjustment of the seat or of the seat backrest!

If the seat or the seat backrest is adjusted unintentionally, it can lead to uncontrolled movements by the driver. This may result in unintentional actuation of the steering or of the operating devices, thereby causing the truck or load to move in an uncontrolled fashion.

- Do not adjust the seat or the seat backrest while driving.
- Adjust the seat and the seat backrest so that all operating devices can be actuated safely.
- Ensure that the seat and the seat backrest are securely engaged.

⚠ WARNING

On some equipment variants, the amount of head clearance on the truck may be restricted.

On these specific equipment variants, the distance between the head and the lower edge of the roofing sheet must be at least 40 mm.

NOTE

Observe any separate operating instructions for the seat.

⚠ WARNING

To obtain optimum seat cushioning, you must adjust the seat suspension to your own body weight. This course of action is better for your back and protects your health.

- To prevent injury, make sure that there are no objects within the swivel area of the seat.

Moving the driver's seat

▷

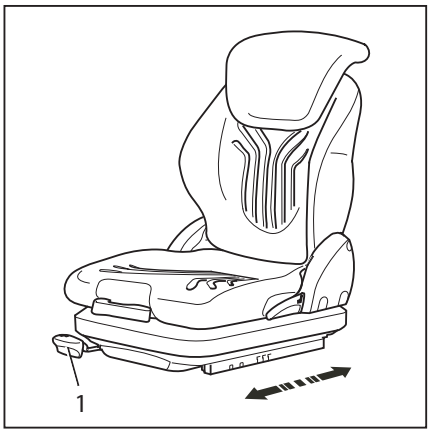

- Lift the lever (1) and hold.
- Push the driver's seat into the desired position.
- Release the lever.
- Ensure that the driver's seat is securely engaged.

Adjusting the seat backrest

▷

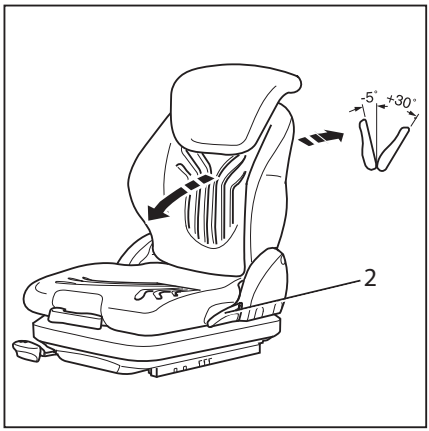

Do not put pressure on the seat backrest while disengaging it.

- Lift the lever (2) and hold.
- Push the seat backrest into the desired position.
- Release the lever.
- Ensure that the seat backrest is securely engaged.

NOTE

The backwards tilt angle of the seat backrest can be restricted by the structural condition of the truck.

Adjusting the seat suspension

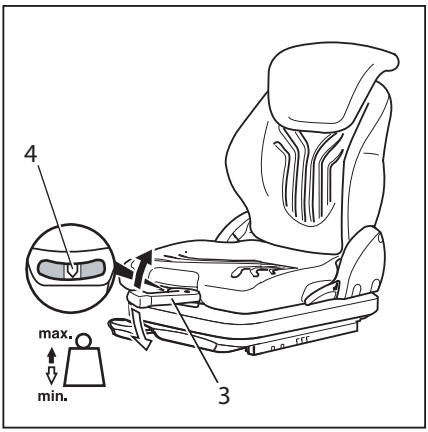

NOTE

The MSG 75 seat is equipped with electric air suspension that is activated using an electric switch instead of a lever (3).

The driver's seat can be adjusted to suit the weight of the individual driver. To achieve the best seat suspension setting, the driver must perform the adjustment whilst sitting on the seat.

– Fully extend the weight adjusting lever (3).

– Pump it up or down to set the driver's weight.

The correct driver's weight has been selected when the arrow (4) is in the centre of the inspection window. If the seat does not move any further when you pump the weight adjusting lever, the minimum or maximum weight setting has been reached.

– Return the weight adjusting lever to the initial central position before each new lift (a click can be heard).

– Fully fold in the weight adjusting lever once adjustment is complete.

Adjusting the lumbar support (variant)

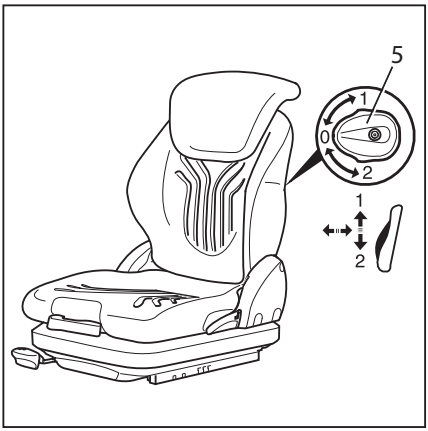

NOTE

The lumbar support can be adjusted to suit the contours of the individual driver's spine. Adjusting the lumbar support moves a convex support cushion into the upper or lower part of the backrest.

– Turn the turning knob (5) up or down until the lumbar support is in the desired position.

Adjusting the backrest extension (variant)

▷

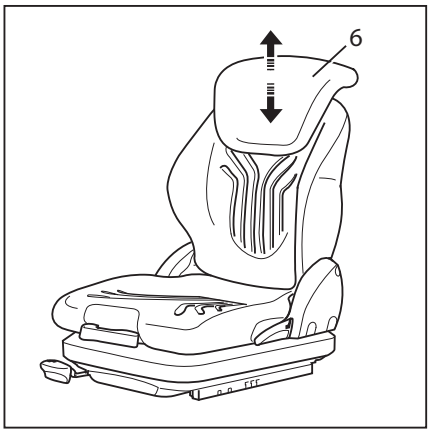

– Adjust the backrest extension (6) by pulling it out or pushing it into the desired position.

To remove the backrest extension, move it past the end stop by jolting it upwards.

Switching the seat heater (variant) on and off

▷

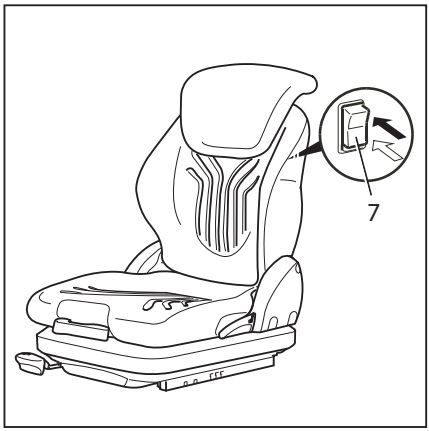

NOTE

The seat heater only functions if the seat contact switch is active, i.e. when the driver is sitting on the driver's seat.

– Switch the seat heater (7) on or off using the switch.

Adjusting the horizontal suspension (variant)

– Push the lever (8) in sideways and slide the driver's seat to the locked position. To release, push the lever outwards.

Using the lever (9), the driver can adjust the hardness in several levels.

– Move the lever (9) to the corresponding notch.

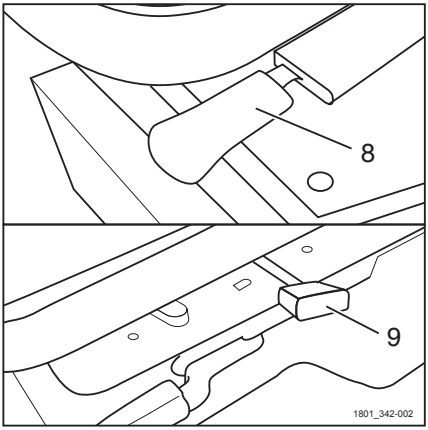

Adjusting the steering column

DANGER

Risk of accident!

– Ensure that the steering column is securely attached.

Never adjust the steering column while driving.

– Push the steering column adjustment lever (1) forwards to release the steering column lock. The lever can be moved back if it interferes with the panelling in front during adjustment.

– Move the steering column horizontally and vertically into the desired position.

– Tighten the locking lever (1). Make sure that the steering column is locked securely.

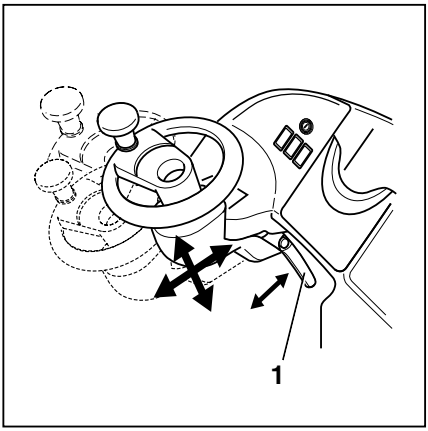

Filling the washer system (variant)

▷

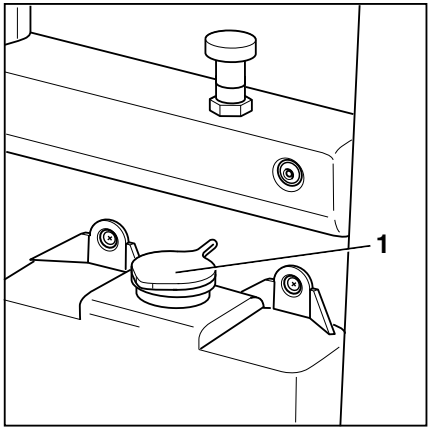

The washer reservoir is located behind the driver's seat in the weather protection cab. The filling opening is accessible from above.

– Open the washer system filler cap (1).

– Fill the washer reservoir with washer fluid and anti-freeze according to the maintenance data table (see the chapter entitled "Maintenance data table").

⚠ CAUTION

Components may become damaged due to the effects of frost!

Water expands when it freezes. If there is no anti-freeze in the washer system (variant), the system may become damaged due to the accumulation of ice in freezing conditions.

– Always use washer fluid containing anti-freeze.

– Observe the maximum fill level of the reservoir (approx. 10 mm below the filler neck).

– Close the filler cap.

– Operate the washer system until washer fluid is discharged from the spray nozzles.

Unlocking the emergency off switch

Unlocking the emergency off switch

▷

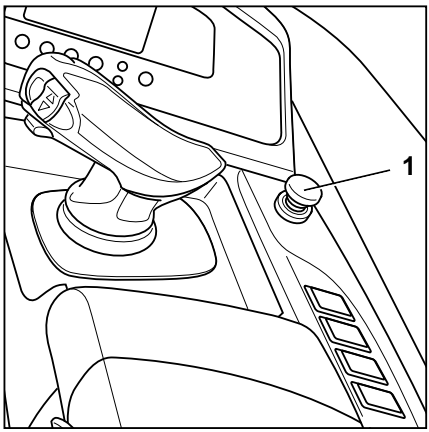

– Pull the emergency off switch (1) upwards until it is unlocked.

Switching on the key switch

⚠ WARNING

Before switching on the key switch, all tests prior to commissioning must be performed without any defects being detected.

- Carry out checks prior to commissioning (refer to the chapter entitled "Checks and tasks to be carried out prior to commissioning").
- Do not operate the truck if defects have been identified.
- If defects are detected, notify the authorised service centre.

- Insert switch key (1) into the key switch and turn to position "I". ▷

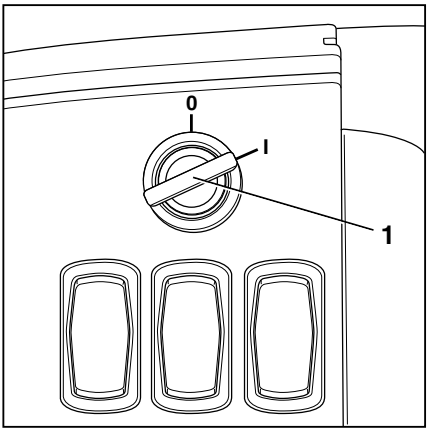

This initiates a self-test. All symbols on the display and operating unit are displayed briefly until the truck controllers have started up completely.

When the truck is switched on, the fork carriage and the reach carriage must initially be in the basic position. In the basic position, the fork carriage is fully lowered, and the reach carriage is fully retracted. This ensures that the electronic support systems which prevent the truck from tipping over with a raised load are recalibrated.

- If the lifting forks and the reach carriage are not in the basic position when the truck is switched on, fully lower the load once and fully retract the reach carriage.

NOTE

The switch key, FleetManager card (variant), FleetManager transponder chip (variant) or FleetManager PIN code (variant) must not be passed to others unless explicit instructions to this effect have been given.

Displays after the switch-on process (for trucks with default options)

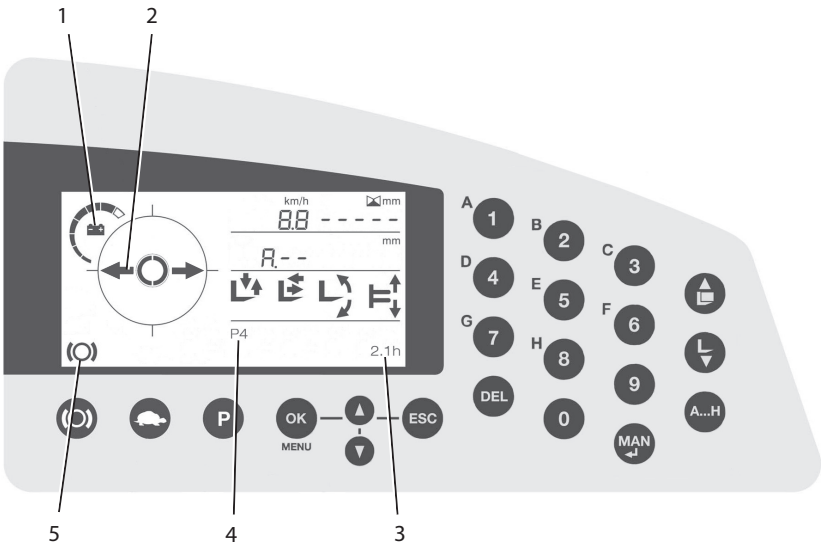

NOTE

Depending on the truck equipment, further information may be visible on the display and operating unit.

Battery charge(1)

The usable battery charge is shown in the display field.

NOTE

After connecting a partially charged battery:

- *If the current battery charge level is higher than the value stored most recently by the truck, the most recently stored value is initially displayed. The correct battery charge level is not displayed until the current value drops below the most recently stored value*

Steering position(2)

The symbol for the neutral steering position is shown in the display field. The actual drive

direction is only selected when the drive direction switch has been actuated once.

Operating hours(3)

The current value of the hour meter is shown in the display field.

Drive programme(4)

The current drive programme (1-4) is shown in the display field.

Parking brake status(5)

The display field indicates that the parking brake has been applied.

NOTE

If malfunctions are displayed, refer to the information in the chapter entitled "Display messages".

Access authorisation with PIN code (variant)

The truck functions can be activated using a five-digit PIN code. A button is used in place of the key switch. Press the button to activate the truck. After the button is pressed, a message appears in the display and the symbol flashes. The five-digit numerical code must now be entered via the keypad.

If the PIN code is entered incorrectly three times, an acoustic signal sounds.

Press the button again to switch off the truck.

Operating the signal horn

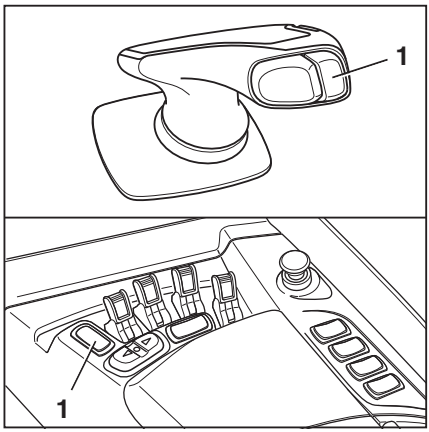

NOTE

The signal horn is used to warn people against imminent danger or to announce your intention to overtake.

– Push the signal horn button (1).

The signal horn sounds.

Checking the brake system for correct function

DANGER

If the brake system fails, the truck will be braked insufficiently or not braked at all, posing a risk of accident!

– Do not commission the truck with a defective brake system.

Checking the service brake

There must be a distance of at least 60 mm between the pressure point and the brake pedal stop.

– Accelerate the truck without a load in a clear area; see "Driving" chapter.

– Press the brake pedal firmly; see the chapter entitled "Operating the service brake".

The truck must decelerate noticeably.

Checking the generator brake

– Accelerate the truck without a load in a clear area; see "Driving" chapter.

– Release the accelerator pedal; see the chapter entitled "Starting drive mode".

The truck must decelerate slightly.

Checking the reverse brake

- Accelerate the truck without a load in a clear area; see "Driving" chapter.
- Change the drive direction in inching mode; see the chapter entitled "Selecting the drive direction".

The braking and subsequent acceleration processes in the opposite direction must be gentle and not subject to jerking movements.

Checking the electromagnetic parking brake

⚠ DANGER

There is a risk of fatal injury from being run over if the truck rolls away.

- The truck must not be parked on a slope.
- In emergencies, secure with wedges on the side facing downhill.
- Only leave the truck once the parking brake has been applied.

- Accelerate the truck to walking speed.
- Ensure that you have a secure grip on the truck; hold onto the steering wheel with your left hand.
- Apply the parking brake; see the chapter entitled "Applying the electromagnetic parking brake".

The parking brake is applied. The truck must be braked to a standstill with a noticeable delay.

Checking the steering system for correct function

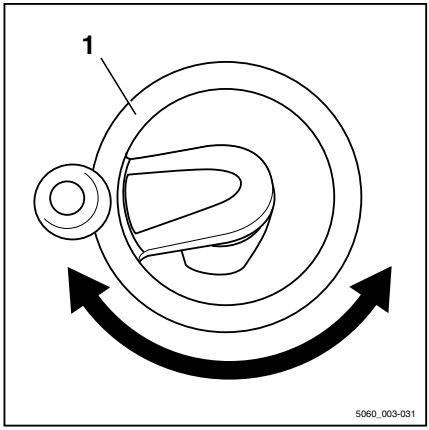

– Operate the steering wheel (1). The steering must be continuous and move freely.

NOTE

In the "180° steering" variant, the drive's maximum steering angle is ±90°.

Checking the emergency off function

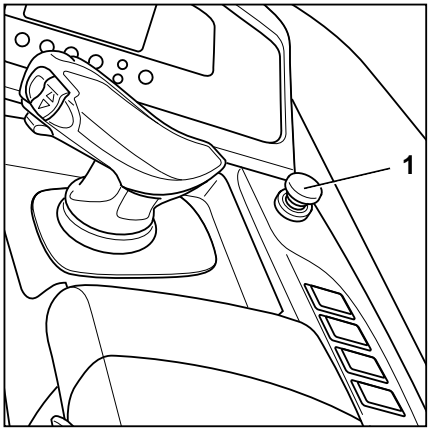

– Accelerate the truck to walking speed.

– Ensure that you have a secure grip on the truck; hold onto the steering wheel with your left hand.

– Press the emergency off switch (1).

The parking brake is applied. The truck must be braked to a standstill with a noticeable delay.

– Pull the emergency off switch (1) upwards until it is unlocked. The truck performs an internal self-test and is then ready for operation again.

Checking the "automatic tilting centre position" (variant) for correct function

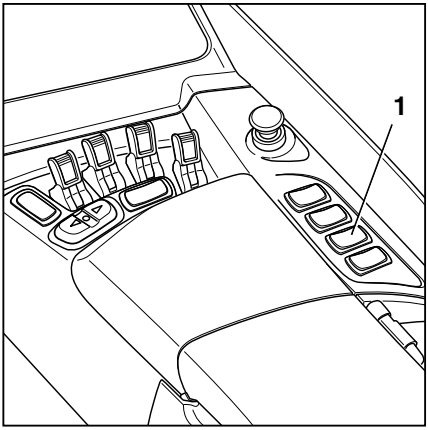

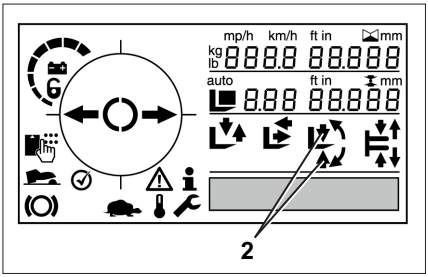

NOTE

Perform the "Automatic tilt to centre position" function check each time before using the truck.

The driver can use the "automatic tilt to centre position" function to change the tilt of the fork arms to 0° automatically. Depending on the truck version, either only the fork carriage (fork tilter) or the entire lift mast (mast tilter) is positioned. To do this, the pushbutton must be actuated until the function switches off automatically.

– Tilt the fork carriage or the entire lift mast towards the drive side.

The fork carriage or the entire lift mast must tilt fully to the drive side and move gently as far as the end stop.

– Push the transition shift/tilt centre position push button (1) on the **right-hand** side.

In the display-operating unit, the arrows (2) on the "transition shift" symbol must flash until the centre position is reached.

Once the function has switched off automatically, the tilt of the fork arms must be in the 0° position.

– Tilt the fork carriage or the entire lift mast towards the load side.

The fork carriage or the entire lift mast must tilt fully to the load side and move gently as far as the end stop.

Lighting

STILL SafetyLight (variant)

STILL SafetyLight is a visual warning unit to enable early detection of trucks in driving areas with low visibility (such as drive lanes, high racks), as well as at blind junctions.

STILL SafetyLight is mounted on a support on the overhead guard such that it is not affected by jolts and vibrations. It projects one or more light blue light spots approximately 5 meters in front of or behind the truck and thus warns others about the approaching truck.

WARNING

Danger of damage to eyes when looking into the STILL SafetyLight.

Do not look into the STILL SafetyLight.

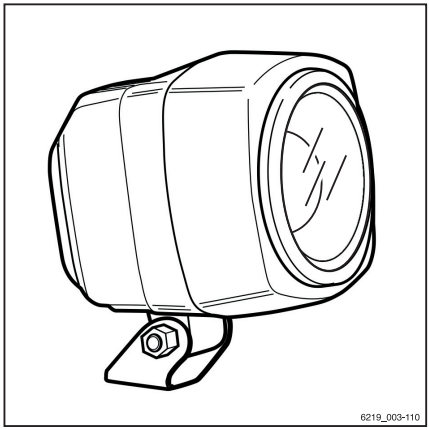

Switching the working spotlights (variant) on and off

There is an option to have the truck fitted with one or several working spotlights (1) to improve illumination of the working area.

– Switch on the truck.

– Push the button (2) for the working spotlights.

The working spotlights (1) are switched on.

– Push the button (2) again to switch the working spotlights off again.

▷

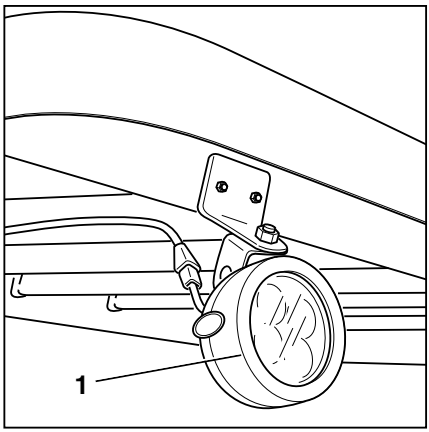

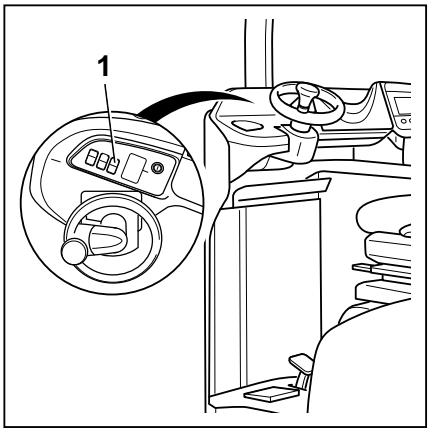

Efficiency and drive modes

Blue-Q efficiency mode

The Blue-Q efficiency mode affects both the drive unit and the activation of the additional consumers and reduces the truck's energy consumption.

If the efficiency mode has been activated, the acceleration behaviour of the truck changes to make acceleration more moderate.

Blue-Q has no influence on:

- Maximum speed
- Climbing capability
- Pulling force
- Braking characteristics

Switching the Blue-Q efficiency mode on and off

– Press the Blue-Q button (2). ▷

The Blue-Q symbol (1) appears in the display and operating unit, which means that the Blue-Q efficiency mode is switched on.

Pressing the Blue-Q button once again turns the Blue-Q efficiency mode off again.

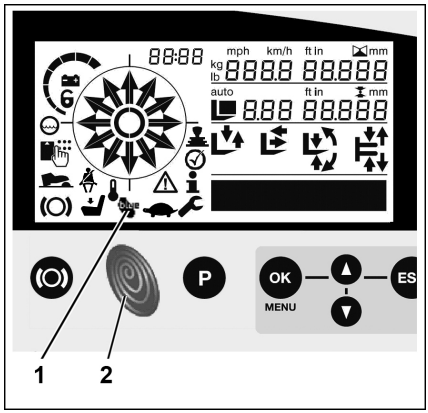

OPTISPEED - Continuously variable reduction in driving speed or hydraulic functions (variant)

The OPTISPEED variant assists the driver by providing two additional functions:

- Reduction of driving speed when turning (Curve Speed Control)
- Reduction in speed of hydraulic functions

Depending on the truck equipment, the two functions may be present either individually or together.

Reduction of driving speed when turning (Curve Speed Control)

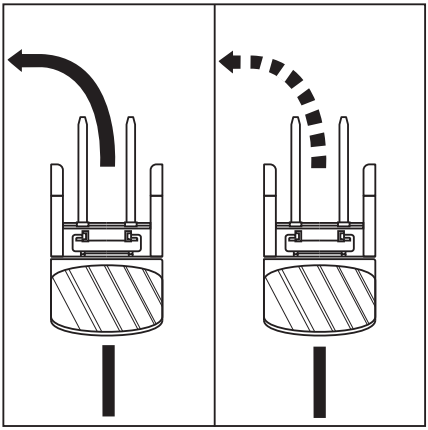

This variant optimises the speed of the truck as the steering angle increases. This assists the driver in handling the truck.

⚠ DANGER

The stability limits defined by the laws of physics are still in effect even when the "reduction of speed when turning" function is active. There is a risk of tipping!

– Before using this function, familiarise yourself with the change to the truck's driving and steering characteristics.

⚠ DANGER

Risk of tipping if cornering speed is too high!

If the controller is switched off or fails while driving, the driving speed will no longer be reduced on cornering.

– Do not switch off the truck while driving.
– Actuate the emergency off switch in emergencies only.
– Always adapt your driving style to the conditions.
– Do not take risks with safety.

In the following situations, the truck may overturn in extreme cases:

- Cornering too fast on uneven or inclined roadways.
- Turning the steering wheel sharply while driving.
- Cornering with an inadequately secured load.
- Cornering too fast on a smooth or wet roadway.

Reduction in speed of hydraulic functions

This variant optimises the speed of the hydraulic functions, taking the lift height and load weight into account. The reduced load vibrations assist the driver when handling the truck.

DANGER

Risk of tipping due to change in vibration characteristics of the load!

If the controller is switched off or fails, the speed of the hydraulic functions will no longer be reduced.

– Always adapt the use of the hydraulic functions to suit the situation.
– Do not take risks with safety.

The optimisation of the hydraulic functions affects the following functions:

- Shifting the reach carriage
- Tilting the lift mast
- Transition shift of the lift mast

This variant can also be equipped with the following additional functions:

- Lift height indicator
- Lift height preselector
- Transition shift centre position
- Tilting centre position

Driving

Safety regulations when driving

Driving conduct

The driver must comply with the highway code when driving within the plant.

The speed must be appropriate to the local conditions.

For example, the driver must drive slowly around corners, in and around tight passageways, when driving through swing doors, at blind spots or on uneven roadways.

The driver must always maintain a safe braking distance from trucks and persons in front, and must always have the truck under control. He must avoid stopping suddenly, turning at speed and overtaking in dangerous places or in blind spots.

Before driving with or without a load, the forks must be lowered as far as possible.

– Initial driving practice must be carried out in an empty space or on a clear roadway.

The following are forbidden when driving:

- Allowing arms and legs to hang outside the truck
- Leaning the body over the outer contour of the truck
- Climbing out of the truck
- Moving the driver's seat
- Adjusting the steering column
- Disabling the restraint system
- Raising the load higher than 500 mm above the ground (with the exception of manoeuvring processes when placing loads into stock/removing loads from stock)
- Using electronic devices, for example radios, mobile phones etc.

⚠ WARNING

The driver's attention is adversely affected by operating multimedia and communication devices or listening to these devices at an excessive volume during travel or when handling loads. There is a risk of accident!

– Do not use devices during travel or when handling loads.
– Set the volume so that warning signals can still be heard.

⚠ WARNING

In areas where the use of mobile phones is prohibited, it is absolutely not permitted to use a mobile phone or radio telephone.

– Switch off the devices.

Visibility when driving

The driver must look in the drive direction and have a sufficient view of the driving lane.

In a reach truck, the driver's visibility may be restricted by the lift mast or the load in particular. The driver must be sure that the route is clear, particularly when travelling in the load direction.

Loads that impair visibility must be transported in the truck's drive direction.

If this is not possible, a second person acting as a guide must walk in front of the truck.

In this case, the driver must only move at walking pace and with extra care. The truck must be stopped immediately if eye contact with the guide is lost.

Additional rear-view mirrors may only be used for observing the road area on the load side of the truck and not for travelling in the load direction. If visual aids (mirror, monitor) are required to achieve sufficient visibility, it is necessary to practise using them. Extra care should be taken when travelling in the load direction if you are using visual aids.

When using attachments, special conditions apply; see the chapter entitled "Fitting attachments".

Any glass and mirrors must always be clean and free of ice.

Panoramic mirror

▷

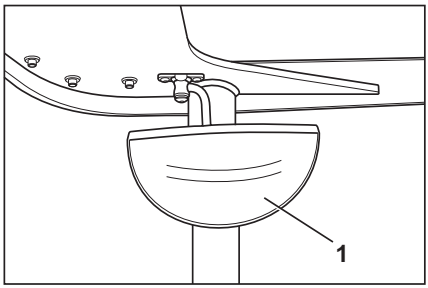

The panoramic mirror (1) may only be used for observing the road area on the load side of the truck and not for travelling in the load direction. Extra care should be taken when travelling in the load direction if you are using visual aids.

The panoramic mirror must always be clean and free of ice.

Any damage to the panoramic mirror that could restrict the driver's visibility must be rectified immediately.

The position of the panoramic mirror may only be changed in such a way that the area behind the lift mast remains visible.

Roadways

Dimensions of roadways and aisle widths

Within the EU, Directive 89/654/EEC (minimum safety and health requirements for the workplace) must be observed. The respective national guidelines apply for areas outside of the EU. In each case, it must be checked whether a larger aisle width is necessary, e.g. in the case of different load dimensions.

The truck may only be used on roadways that do not have excessively sharp bends, excessively steep gradients or excessively narrow or low entrances.

Driving on ascending and descending gradients

⚠ WARNING

Driving up and down longer gradients may result in the drive unit overheating or the minimum specified braking values being exceeded.

– Do not drive up or down longer gradients.
– Do not exceed the maximum permissible gradients for roadways (see table below).

The truck is designed for normal operation on smooth, even roadways without major gradients, up to a maximum of 3%.

The following gradients (e.g. on ramps) must not be exceeded when using the truck under any circumstances:

Truck type	Max. permissible gradient in %	
	With load	Without load
FM-X 10, FM-X 12, FM-X 14, FM-X 17, FM-X 20, FM-X 25	15	20
FM-X 10N, FM-X 12N, FM-X 14N, FM-X 17N, FM-X 20N	15	20

Picking up a load, putting down a load, stacking or unstacking is only permitted on a horizontal, level surface.

Warning in the event that components project beyond the truck contour

Trucks are often required to drive through very narrow or very low spaces such as aisles or containers. The dimensions of the trucks are designed for this purpose. However, movable parts may project beyond the truck contour and be damaged or torn off. Examples of such components include:

- Extended lift mast
- Additional attachments (mirrors, monitors etc.)
- Cab doors

Condition of the roadways

Roadways must be sufficiently firm, smooth and even. The surface must be free from dirt and fallen objects. Drainage channels, level crossings and similar obstacles must be evened out, and if necessary, ramps must be provided so that trucks can drive over these obstacles with as few bumps as possible.

Ensure that manhole covers, drain covers etc. offer a sufficient load capacity.

The permitted area load and point load of the roadways must not be exceeded. There must be sufficient distance between the highest points of the truck or the load and the fixed elements of the surrounding area. The height is based on the overall height of the truck's lift mast and the dimensions of the load.

Rules for roadways and the working area

It is only permitted to drive on routes authorised for traffic by the operating company (see chapter "Responsible persons") or its representatives. Traffic routes must be free of obstacles. The load must only be set down and stored in the designated locations. The operating company and its representatives must ensure that unauthorised third parties do not enter the working area.

Hazard areas

Hazard areas on roadways must be marked by standard traffic signs or, if necessary, by additional warning signs.

Side chassis supports

Side chassis supports (1) on the rear left and right of the truck support the truck if it tips to the side.

The permissible distance "X" for the ground clearance of the chassis supports (2) is noted on the load capacity diagram on the truck. It must be observed at all times.

The size of this distance depends on following factors:

- Height of the lift mast
- Load capacity of the truck
- Size of the battery tray

WARNING

Risk of accident due to limited residual load capacity of the truck.

The side chassis supports have an important impact on the residual load capacity of the truck.

– If the truck frequently bottoms out, check the support distance "X" regularly and have it adjusted by the authorised service centre if necessary.

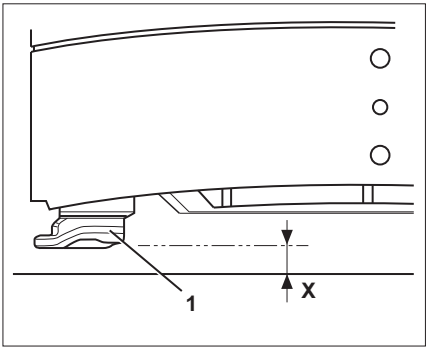

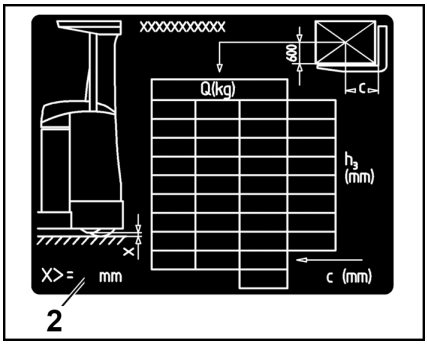

Enabling truck functions using the foot switch and seat switch

The foot switch and seat switch are there for safety purposes during operation of the truck. The complete range of truck functions is available only when the driver is sitting on the driver's seat and then actuates the foot switch.

Enabling the truck functions using the foot switch

The truck's drive function and hydraulic functions are enabled only when the driver actuates the foot switch (1). The left foot is therefore protected within the contour of the truck.

Trucks with one accelerator pedal

The **hydraulic functions** are only enabled if:

- The seat switch and the foot switch have been actuated
- The required hydraulic function is then selected
- The switches are all functioning correctly

The **drive** function is only enabled if:

- The parking brake has been released
- The seat switch and the foot switch have been actuated but the accelerator pedal has **not**
- The accelerator pedal is then actuated
- The switches are all functioning correctly

If the switch malfunctions during operation, the truck is braked to a standstill or to a speed of 2.5 km/h, according to truck type, and a corresponding message appears in the display and operating unit.

NOTE

Once the truck has been switched on, the parking brake must first be released one time. The parking brake will only be released once the accelerator pedal is activated slightly.

Trucks with two accelerator pedals (variant)

The **hydraulic functions** are only enabled if:

- The seat switch has been actuated
- The switch is functioning correctly

The **drive** function is only enabled if:

- The parking brake has been released
- The seat switch has been actuated but the accelerator pedals have **not**

▷

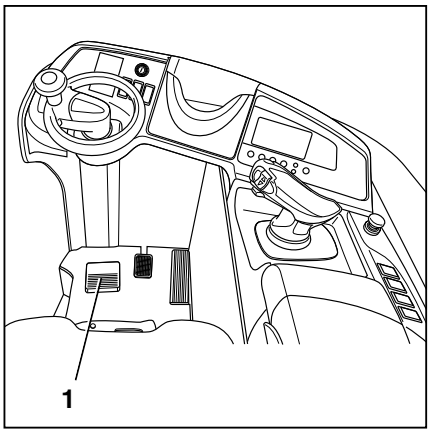

- One of the accelerator pedals is then actuated
- The switches are all functioning correctly

NOTE

The parking brake is released once one of the accelerator pedals is actuated slightly.

Enabling the truck functions using the seat switch

The seat switch monitors whether or not a driver is seated on the driver's seat. The seat switch must always be actuated first, and then the foot switch. Only then can the driver select the drive function or the hydraulic functions.

If the switch malfunctions during operation, the truck is braked to a standstill or to a speed of 2.5 km/h, according to truck type, and a corresponding message appears in the display and operating unit.

If the seat switch is defective or if the switch was not actuated at least once within an eight-hour period, the controller also assumes that there is a malfunction.

– If the problem persists after the driver's seat has been occupied once and then vacated, please contact the authorised service centre.

NOTE

If the truck remains switched on for longer than eight hours in total, the switch status of the seat switch must change at least once. As a rule, this does happen during normal operation. If this has not happened, the seat switch must be released and then re-actuated once while the truck is switched on.

Setting the drive programme

Setting

The driving and braking characteristics of the drive can be set on the display and operating unit.

Four different drive programmes can be set. Depending on the drive programme selected, different driving characteristics are applied in relation to the maximum speed, acceleration behaviour* and deceleration behaviour**. Essentially, the higher the number of the drive programme, the greater the driving dynamics.

When a truck is delivered, it is set to drive programme 4 (P4).

The factory-set parameters are shown in the table.

Code	1	2	3	4
V_{max} (km/h)	10	12	14	14
*m/s^2	0.6	1.1	1.4	1.8
**m/s^2	0.8	1.0	1.0	1.2

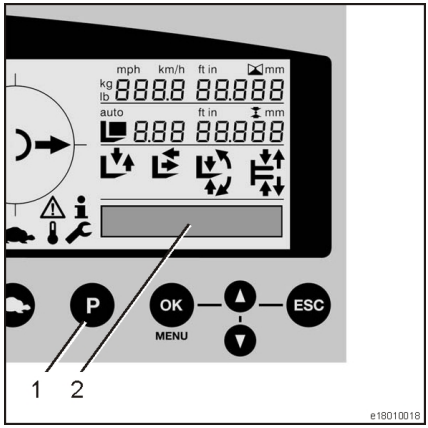

NOTE

Only the drive programme can be changed. The characteristic for the relevant drive programme can only be changed by authorised service personnel.

Adjustment process

- The drive profile changes each time the "P" button (1) is pressed (P1 - 4).
- The selected drive programme is indicated on the display (2).

Creep speed drive programme

- Push the "tortoise" button on the display and operating unit.
- The "tortoise" symbol appears on the display and the "creep speed" drive programme is selected.

Selecting the drive direction

The desired drive direction of the truck must be selected using the drive direction switch before attempting to drive. When the truck is switched on, there is initially no drive direction selected. The drive direction indicator on the display and operating unit shows the "neutral position" symbol (1).

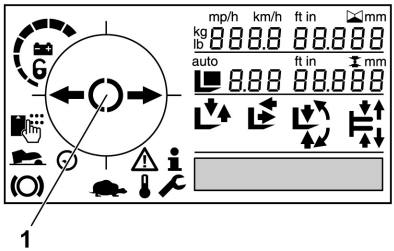

Actuation of the drive direction switch depends on which operating devices are fitted on the truck.

Possible equipment variants include:

- **Joystick 4Plus**, refer to the chapter entitled "Actuating the drive direction switch, joystick 4Plus"
- **Fingertip**; see the chapter entitled Actuating the drive direction switch, fingertip.

NOTE

The drive direction can also be changed during travel. Your foot can remain on the accelerator pedal. The truck decelerates and is then accelerated again in the opposite direction (reversing).

After actuating the drive direction switch, the drive direction is shown on the display and operating unit (2).

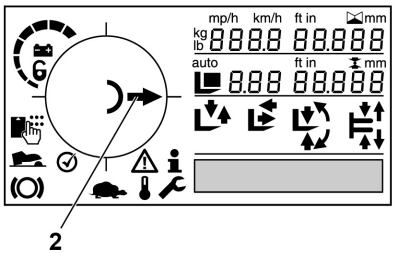

Neutral position

If the truck is stopped for an extended period, select the neutral position to prevent the truck from suddenly starting if the accelerator pedal is pressed inadvertently.

– Lightly actuate the drive direction switch for the drive direction opposite to the current direction.

The drive direction indicator on the display and operating unit changes to show the "neutral position" symbol.

– Actuate the drive direction switch again to select a drive direction.

NOTE

When the driver leaves the seat, the direction switch is set to neutral. To drive, the direction switch must be actuated again.

Actuating the drive direction switch, joystick 4Plus

▷

- For "travelling in the load direction", press the drive direction switch (1)**up**.
- For "travelling in the drive direction", press the drive direction switch (1)**down**.

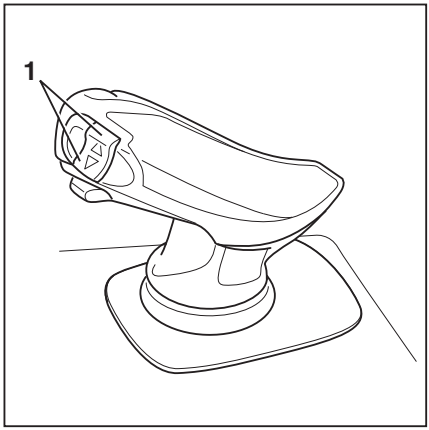

Actuating the drive direction switch, fingertip

▷

- For "travelling in the load direction", press the drive direction switch (1) on the **right-hand** side.
- For "travelling in the drive direction", press the drive direction switch (1) on the **left-hand** side.

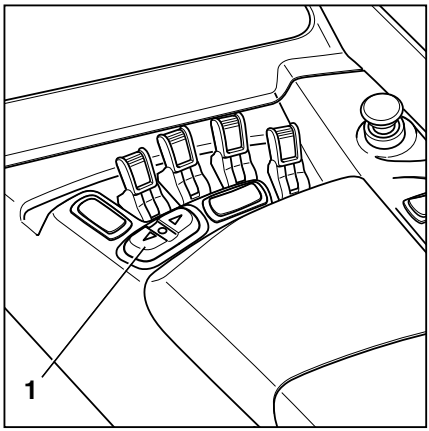

Starting drive mode, single-pedal version

DANGER

Being trapped under a rolling or tipping truck could cause fatal injuries.

- Sit down on the driver's seat.
- During work, ensure that you have a secure grip on the truck and a stable seat position. Hold on tight to the steering wheel with your left hand.

Observe the information in the chapter entitled "Safety regulations when driving".

The driver's seat is equipped with a seat switch. In the event of an operating error or malfunction, see the chapter entitled "Enabling truck functions using the foot switch and seat switch".

- Lift the fork carriage until the necessary ground clearance is achieved.
- Tilt the lift mast backwards.
- Release the parking brake.
- Select the desired drive direction.

The selected drive direction is shown on the display and operating unit (1). ▷

NOTE

Depending on the equipment, an acoustic or visual warning signal is issued in relation to the drive direction (variant).

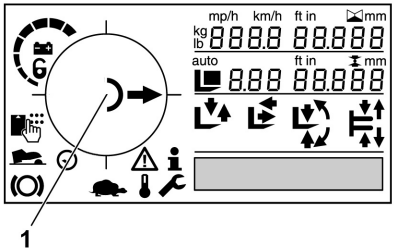

– Actuate the accelerator pedal (2). ▷

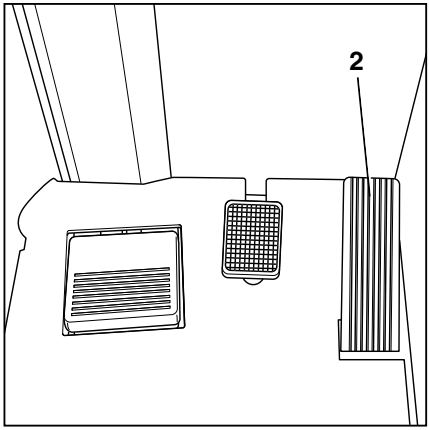

The truck will travel in the selected drive direction. The speed is controlled by the accelerator pedal position. When the accelerator pedal is released, the truck decelerates.

NOTE

The truck can be held at a standstill briefly on upward or downward gradients without actuating the parking brake (anti-roll brake for slopes). The truck will then begin to creep downhill slowly.

Changing the drive direction

– Remove foot from accelerator pedal.

– Select the desired drive direction.

– Actuate the accelerator pedal.

The truck will travel in the selected drive direction.

NOTE

The drive direction can also be changed during travel. Your foot can remain on the accelerator pedal while doing so. The truck decelerates and is then accelerated again in the opposite direction (reversing).

NOTE

In the event of an electrical fault with the accelerator the drive unit is shut down. The truck is braked by regenerative braking. The truck cannot be driven again until the accelerator pedal has been released and then actuated again. If the truck still cannot be operated, park it securely and contact your authorised service centre.

Starting drive mode, dual-pedal version (variant)

DANGER

Being trapped under a rolling or tipping truck could cause fatal injuries.

- Sit down on the driver's seat.
- During work, ensure that you have a secure grip on the truck and a stable seat position. Hold on tight to the steering wheel with your left hand.

Observe the information in the chapter entitled "Safety regulations when driving".

The driver's seat is equipped with a seat switch. In the event of an operating error or malfunction, see the chapter entitled "Enabling truck functions using the foot switch and seat switch".

- Lift the fork carriage until the necessary ground clearance is achieved.
- Tilt the lift mast backwards.
- Release the parking brake.
- To "travel in the load direction", press the right-hand accelerator pedal (1).
- To "travel in the drive direction", press the left-hand accelerator pedal (2).

NOTE

In the dual pedal version, any drive direction switches on the operating devices will not function.

▷

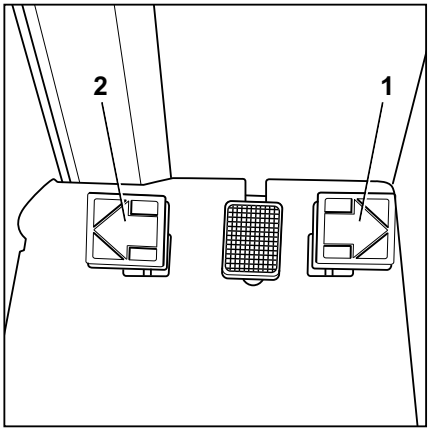

The selected drive direction is shown on the display and operating unit (3). ▷

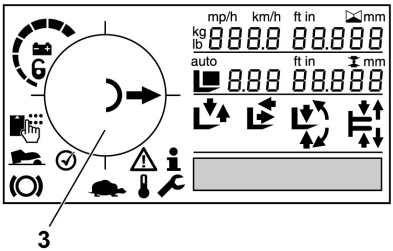

NOTE

Depending on the equipment, an acoustic or visual warning signal is issued in relation to the drive direction (variant).

The truck will travel in the selected drive direction. The speed is controlled by the accelerator pedal position. When the accelerator pedal is released, the truck decelerates.

NOTE

The truck can be held at a standstill briefly on upward or downward gradients without actuating the parking brake (anti-roll brake for slopes). The truck will then begin to creep downhill slowly.

Changing the drive direction

- Remove foot from actuated accelerator pedal.
- Actuate the accelerator pedal for the opposite direction.

The truck will travel in the selected drive direction.

NOTE

In the event of an electrical fault with the accelerator the drive unit is shut down. The truck is braked by regenerative braking. The truck cannot be driven again until the accelerator pedal has been released and then actuated again, provided that the electrical fault has been corrected. If the truck still cannot be operated, park it securely and contact your authorised service centre.

Operating the service brake

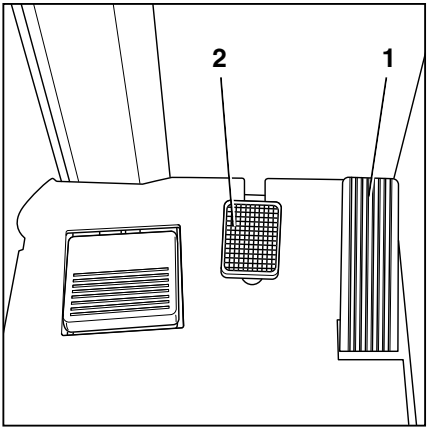

Electrical braking recovers energy for the battery. This results in a longer operating time between the charging processes and less wear to the brakes.

The electric brake converts the acceleration energy of the truck into electrical energy as soon as the accelerator pedal is released. This causes the truck to brake.

The truck can also be braked with the mechanical brake by actuating the brake pedal (2). When the pedal is pressed gently, the mechanical brake acts on the load wheels in addition to the electric brake. When the pedal is pressed firmly, the braking effect of both brake systems increases.

⚠ DANGER

If the service brake fails, the truck cannot brake sufficiently. There is a risk of accident!

If the driver detects an abnormal decrease in the braking effect, there may be a technical fault.

- Press the emergency off switch to bring the truck to a standstill with the electromagnetic parking brake.
- Notify the authorised service centre.
- Do not operate the truck again until the service brake has been repaired.

⚠ DANGER

At speeds that are too high, there is a danger that the truck could slip or overturn!

The braking distance of the truck depends on the weather conditions and the level of contamination on the roadway.

- Adapt your driving and braking style to suit the weather conditions and the level of contamination on the roadway.
- Always choose a driving speed that will provide a sufficient stopping distance.

- Brake the truck by releasing the accelerator pedal (1).
- If the braking effect is inadequate, use the brake pedal (2) as well to apply the mechanical brake.

Applying the electromagnetic parking brake

DANGER

There is a risk of fatal injury from being run over if the truck rolls away.

- Only leave the truck once the parking brake has been applied.
- The truck must not be parked on a slope.
- In emergencies, secure with wedges on the side facing downhill.

The parking brake helps the driver to park the truck safely. It is released or applied manually or via additional automatic functions. Despite these automatic aids, the driver is always responsible for parking the truck safely. The safety information about safe parking of the truck applies.

Functions of the parking brake when the truck is at a standstill ▷

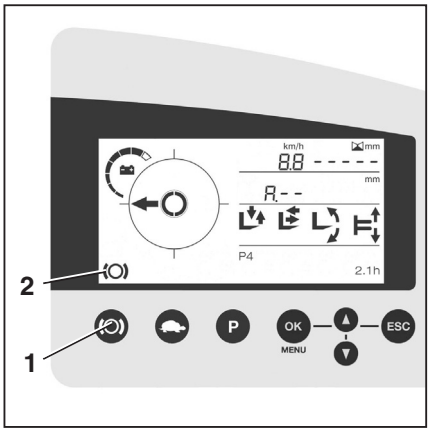

Release of the parking brake by the driver

When the truck is ready for operation, the driver can release the parking brake at any time by pushing the button.

- Sit on the driver's seat.
- Push the button (1) to release the parking brake.

The parking brake is released audibly and the symbol (2) on the display and operating unit disappears.

Application of the parking brake by the driver

- Push the push button (1) to apply the parking brake.

The parking brake is applied audibly and the symbol (2) is shown on the display and operating unit.

Automatic release of the parking brake when the driver sets off

The parking brake is released automatically when the driver sets off provided that the parking brake has been manually released once since the truck was switched on.

- Sit on the driver's seat.
- Select the drive direction (single-pedal version only).
- Press the foot switch.
- Actuate the accelerator pedal.

The parking brake is released automatically and audibly, and the symbol on the display and operating unit disappears. The truck moves off.

Automatic application of the parking brake

Cause	Effect
If the driver's seat is vacated or the foot switch is released:	After 3 seconds, the parking brake closes audibly. The symbol (2) is shown in the display-operating unit.
If the truck is switched off:	The parking brake is applied immediately and audibly. The symbol (2) is shown briefly on the display and operating unit until the control units switch off.
If the emergency off switch is actuated or as a result of an emergency off function:	The parking brake is applied immediately and audibly, and the symbol (2) is shown on the display and operating unit.

Functions of the parking brake when the truck is moving ▷

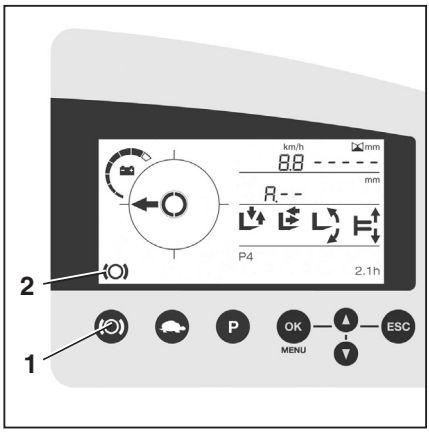

Application of the parking brake by the driver

NOTE

Braking with the parking brake while the truck is in motion will result in heavy wear of the brake linings. Therefore, always use regenerative braking or the mechanical brake to brake while the truck is in motion. Only use the parking brake while the truck is in motion in the event of an emergency.

- Ensure the truck has a secure grip. Hold on tight to the steering wheel with your left hand.
- Push the push button (1) to apply the parking brake.

The parking brake is applied immediately and audibly, and brings the truck to a standstill.

The symbol (2) is shown in the display and operating unit.

Automatic application of the parking brake

Cause	Effect
If the truck is switched off:	The parking brake is applied immediately and audibly. The symbol (2) is shown briefly on the display and operating unit until the control units switch off.
If the emergency off switch is actuated or as a result of an emergency off function:	The parking brake is applied immediately and audibly, and the symbol (2) is shown on the display and operating unit.

NOTE

If the driver's seat is vacated or the foot switch is released while the truck is in motion, the parking brake is not applied. The truck is then brought to a standstill by regenerative braking.

Steering

NOTE

Please do not steer when the truck is at a standstill, as this causes the drive wheel to be put under extreme pressure and therefore increases wear.

360° steering (standard)

▷

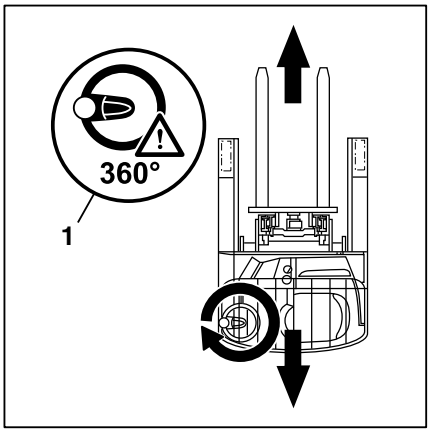

The steering wheel has no mechanical stops and can be continuously turned.

Starting in the straight-ahead position, the steered wheel reaches the 90° position after 2, 2½ or 3 revolutions (can be configured) of the steering wheel. This position corresponds to the truck's smallest turning radius. The steering can be turned further from this position (1), which reverses the drive direction.

The drive direction indicator on the display and operating unit shows the actual drive direction.

180° steering (variant)

The steering wheel has no mechanical stops and can be continuously turned.

The path of travel (1) is determined by turning the steering wheel. The maximum steering angle of the steered wheel is 90° to each side. To reverse the drive direction, the drive direction switch must be actuated.

The drive direction indicator on the display and operating unit shows the actual drive direction.

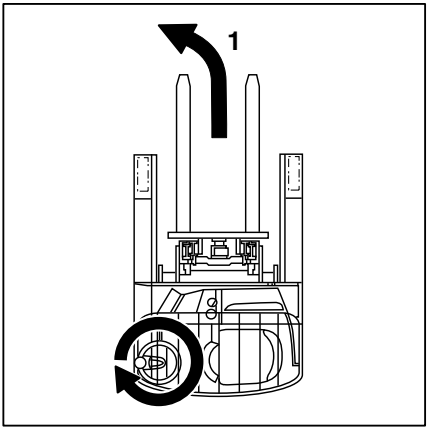

Reverse steering (variant)

If the steering wheel is turned clockwise when travelling in the load direction, the truck will move to the right. If the steering wheel is turned anticlockwise when travelling in the load direction, the truck will move to the left.

Trucks with reverse steering are marked with an adhesive label (1) next to the steering wheel adjustment mechanism.

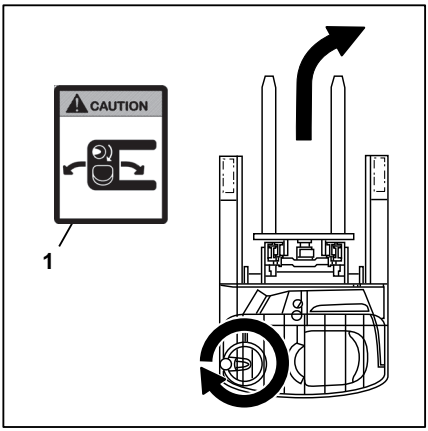

Emergency operation of the reach measurement system

When driving over bumps or foreign bodies in the reach measurement system, the system can temporarily lose the current shift position. If the reach travel position cannot be measured, the measurement system operates only in emergency operation.

Effects of emergency operation

- The position of the reach carriage is no longer shown in the display
- The "shift" function is performed at a reduced speed
- The reach carriage moves abruptly into the end stops
- The error number `A3421` is shown in the display

The driver can correct a temporary malfunction:

- Re-reference the reach measurement system
- Check the reach measurement system for foreign objects

If the malfunction persists after the test, contact your authorised service centre.

Re-referencing the reach measurement system

A temporary malfunction of the reach measurement system can be corrected by approaching the reference points of the system. To do this, the reach carriage must be fully retracted and extended several times.

– Fully retract the reach carriage. Extend the reach carriage again. Retract the reach carriage again.

The reach carriage must then be moved gently into the end stops and the reach travel position must be shown in the display again.

Checking the reach measurement system for foreign objects

DANGER

Risk of injury due to movement of the reach carriage during the test

Switch the truck off before the test. Disconnect the battery male connector.

The reach measurement system consists of the reach travel sensor (1) and a reference bar (2). Foreign objects between the sensor and the reference bar may interfere with the reach travel measurement. The driver can perform a visual inspection.

The reach travel measurement is located on the left load wheel support of the reach carriage.

- To gain access to the measurement system, fully extend the truck battery with the reach carriage. To do this, observe the information in the chapter entitled "Operation/Handling the battery/Actuating the battery lock".
- Switch off the truck. Disconnect the battery male connector.
- If necessary, remove any foreign objects between the sensor and the reference bar.
- Connect the battery male connector. Switch the truck on.
- Fully retract the reach carriage with the battery again until the battery lock engages audibly.
- Then re-reference the reach measurement system (see above).

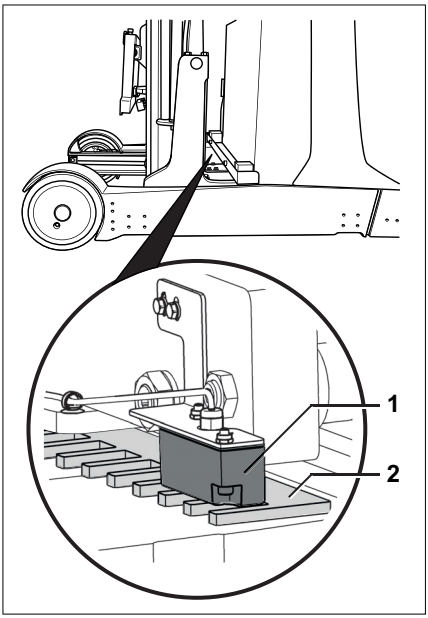

Parking

Parking the truck securely

DANGER

There is a risk of fatal injury from being run over if the truck rolls away.

- The truck must not be parked on a slope.
- In emergencies, secure with wedges on the side facing downhill.
- Only leave the truck once the parking brake has been applied.

DANGER

There is a risk to life caused by a falling load or if parts of the truck are being lowered!

- Before leaving the truck, lower the load fully.

CAUTION

Batteries may freeze!

At an ambient temperature of below –10°C for a prolonged period, the batteries cool down. The electrolyte may freeze and damage the batteries. The truck is then not ready for operation.

- At ambient temperatures of below -10°C, only park the truck for short periods of time.

- Actuate the pushbutton for the parking brake (refer to the chapter entitled "Applying the electromagnetic parking brake").
- Retract the reach carriage fully.
- Lower the fork to the ground. ▷
- Tilt the lift mast forwards until the tips of the fork arms rest on the ground.
- If attachments (variant) are fitted, retract the working cylinders.
- Switch off the truck. If the switch key is present, pull it out (variant).

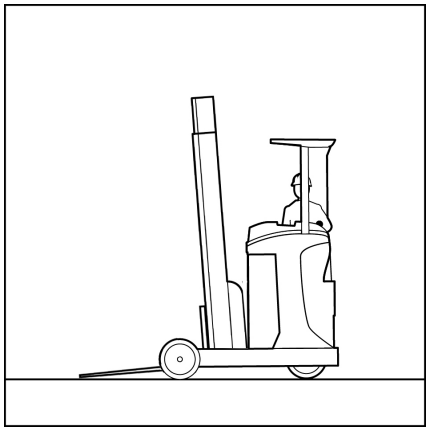

NOTE

The switch key, FleetManager card (variant), FleetManager transponder chip (variant) or FleetManager PIN code (variant) must not be passed to others unless explicit instructions to this effect have been given.

Lifting

Lifting system variants

The movement of the fork carriage and the lift mast heavily depends on the following equipment:

- The lift mast fitted on the truck; see the chapter entitled "Lift mast versions"
- The operating device that is used to control the hydraulic functions; see the chapter entitled "Lifting system operating devices"

Regardless of the equipment variants of the truck, the basic specifications and procedures must be observed; see the chapter entitled "Safety regulations for working with loads".

Lift mast versions

⚠ DANGER

Risk of accident due to collision of the lift mast or load with low ceilings or entrances.

– Note that the inner lift mast or load may be higher than the fork carriage.
– Observe the heights of ceilings and entrances.

One of the following lift masts may be installed in the truck:

Telescopic lift mast

During lifting, the lift mast rises above the outer lift cylinders, bringing the fork carriage with it via the chains (fork carriage rises twice as fast as the inner lift mast). The top edge (1) of the inner lift mast can therefore be higher than the fork carriage.

▷

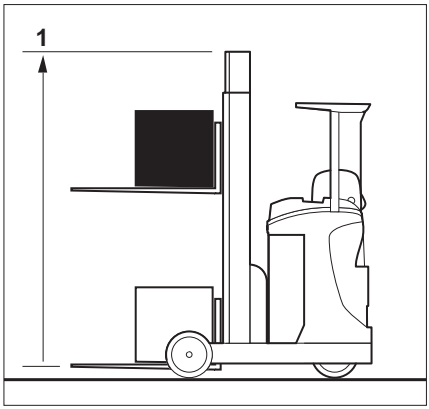

Triplex lift mast (variant)

During lifting, the inner lift cylinder raises the fork carriage up to the free lift (2) and then the outer lift cylinders raise the inner lift mast straight up to the max. height (3).

▷

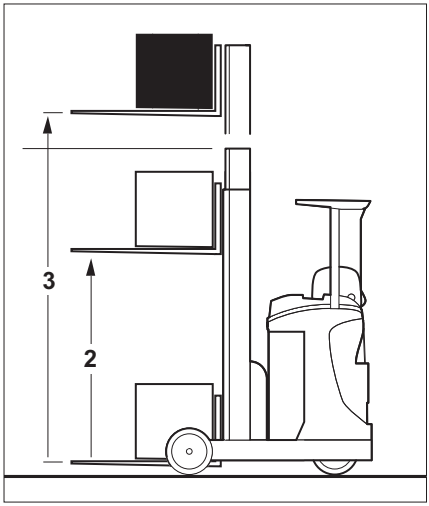

Lifting system operating devices

The operation of the lifting system depends on the operating devices that are fitted on the truck.

Possible equipment variants include:

- **Joystick 4Plus**; refer to the chapter entitled "Joystick 4Plus lifting system"
- **Fingertip switch**; refer to the chapter entitled "Fingertip switch lifting system"

Joystick 4Plus lifting system

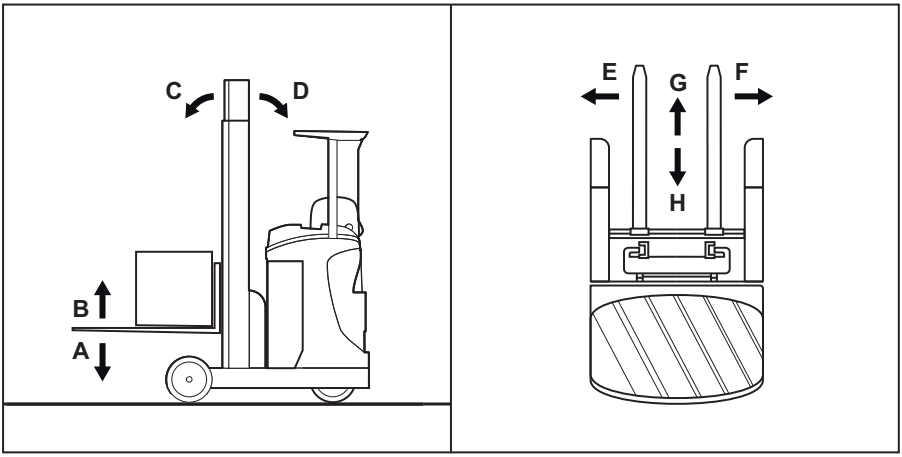

A / B	Lowering/lifting the fork carriage	E / F	Transition shift (variant)
C / D	Tilting the lift mast (variant)	G / H	Shifting

DANGER

Reaching or climbing between moving parts of the truck (e.g. lift mast, sideshifts, working equipment, load carrying devices etc.) can lead to serious injury or death and is therefore prohibited.

- Always observe the safety regulations for handling loads; see ⇒ Chapter "Safety regulations when handing loads", P. 4-138.
- Only operate the lifting system from the driver's seat.

In this version, the hydraulic functions are controlled using the joystick 4Plus. The pictogram (1) shows the basic hydraulic functions and how they are controlled using the joystick. The pictogram (2) shows the 3rd and 4th function and their operation.

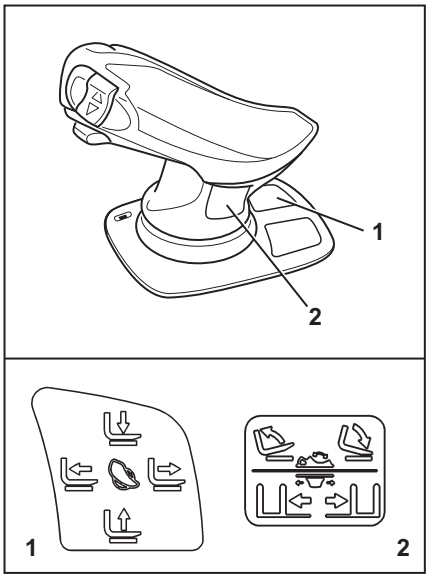

Lifting/lowering the fork carriage

To lift the fork carriage:

– Pull the joystick (1) in the direction of "B".

To lower the fork carriage:

– Push the joystick (1) in the direction of "A".

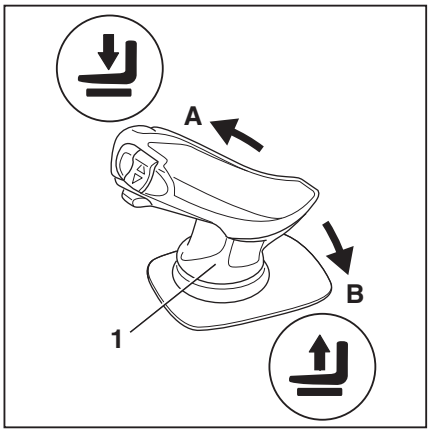

Tilting the lift mast or fork carriage (variant)

Depending on the truck equipment, either the entire lift mast is tilted or just the fork carriage (fork tilt device).

To tilt the lift mast backwards:

– Push the rocker button (2) towards "D".

To tilt the lift mast forwards:

– Push the rocker button (2) towards "C".

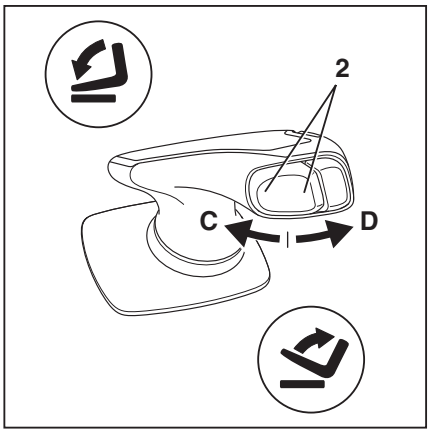

Transition shift (variant)

Depending on the truck equipment, either the entire lift mast is shifted to the side or just the fork carriage (fork sideshifter).

Transition shift to the left:

– Slide the slider (3) towards "E".

Transition shift to the right:

– Slide the slider (3) towards "F".

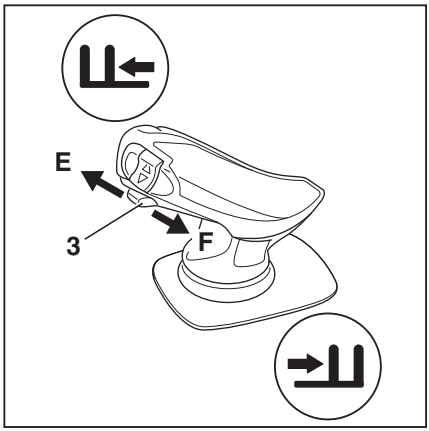

Shifting

To extend the reach carriage:

– Push the joystick (4) in the direction of "G".

To retract the reach carriage:

– Push the joystick (4) in the direction of "H".

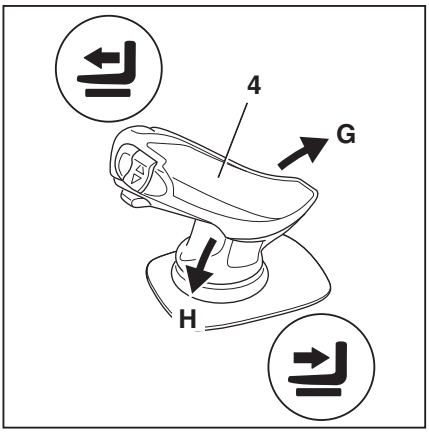

NOTE

The pictograms on the base of the joystick show the direction of movement for the corresponding hydraulic function.

Fingertip lifting system

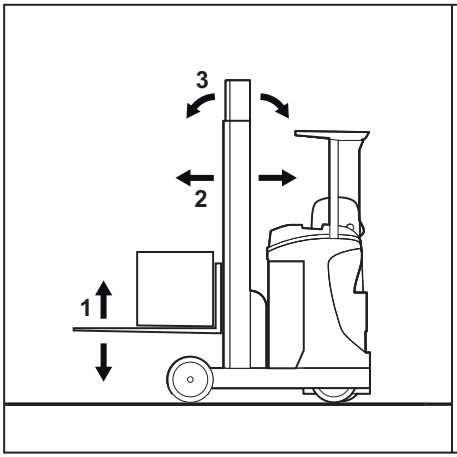

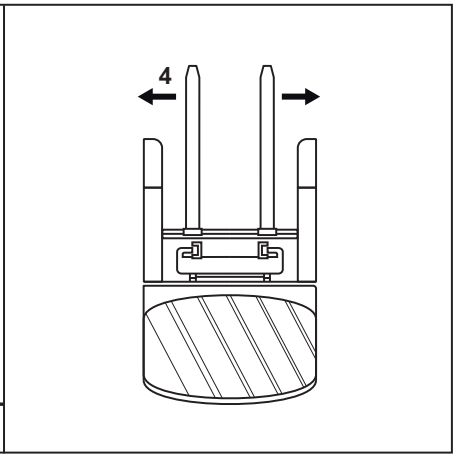

1	Lowering/lifting the fork carriage	3	Tilting the lift mast or fork carriage (variant)
2	Shifting	4	Transition shift (variant)

⚠ DANGER

Reaching or climbing between moving parts of the truck (e.g. lift mast, sideshifts, working equipment, load carrying devices etc.) can lead to serious injury or death and is therefore prohibited.

- Always observe the safety regulations for handling loads; see ⇒ Chapter "Safety regulations when handing loads", P. 4-138.
- Only operate the lifting system from the driver's seat.

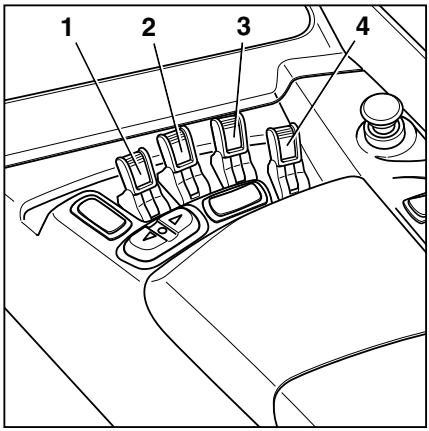

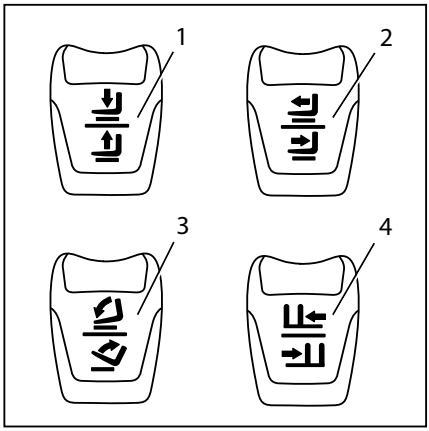

Lifting/lowering the fork carriage

To lift the fork carriage:

- Pull the "lift/lower" operating lever (1) backwards.

To lower the fork carriage:

- Push the "lift/lower" operating lever (1) forwards.

Shifting

To extend the reach carriage:

- Push the "shift" operating lever (2) forwards.

To retract the reach carriage:

- Pull the "shift" operating lever (2) backwards.

Tilting the lift mast or fork carriage (variant)

Depending on the truck equipment, either the entire lift mast is tilted or just the fork carriage (fork tilt device).

To tilt the lift mast forwards:

- Push the "tilt" operating lever (3) forwards.

To tilt the lift mast backwards:

- Pull the "tilt" operating lever (3) backwards.

Transition shift (variant)

Depending on the truck equipment, either the entire lift mast is shifted to the side or just the fork carriage (fork sideshifter).

Transition shift to the left:

– Push the "transition shift" operating lever (4) forwards.

Transition shift to the right:

– Pull the "transition shift" operating lever (4) backwards.

NOTE

The pictograms on the operating levers show the direction of movement for the corresponding hydraulic function.

Automatic lift cut out (variant)

The automatic lift cut-out interrupts the lifting of the load at a certain height. The height must be set by the authorised service centre.

Intermediate lift cut-out (acknowledge-able)

The intermediate lift cut-out makes frequent approaches to a required lift height easier.

The driver can override the lift cut-out by pressing the acknowledge button (1) or by pressing shift key "F"(3). As soon as the fork is lowered below the limit height, the lift cut-out is active again. As a result, the lift cut-out can be used in different hall areas with different lift heights.

Overriding the lift cut out by pressing the acknowledge button:

- Press the acknowledge button (1) to over-ride the cut out.

Overriding the lift cut out by pressing the "F button":

- The adhesive label (2) indicates that the "F button" (3) is another option that can be used to acknowledge commands.

  Move the joystick or the fingertip switch to the zero position. Within one second, press the "F button" and release it again to override the cut-out.

  If the "F button" is not pressed and then released within one second, the default function of the F button is restored automat-ically.

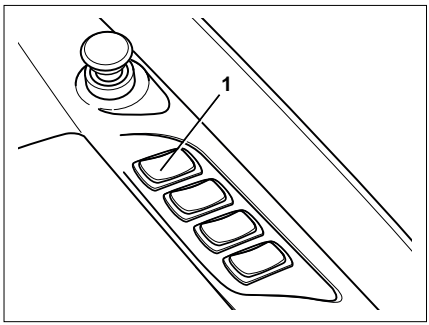

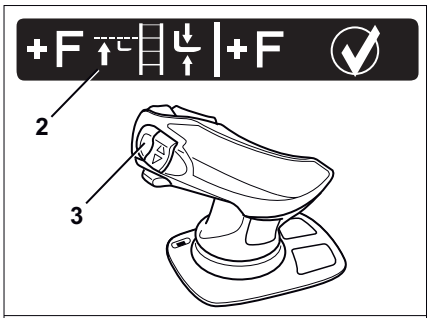

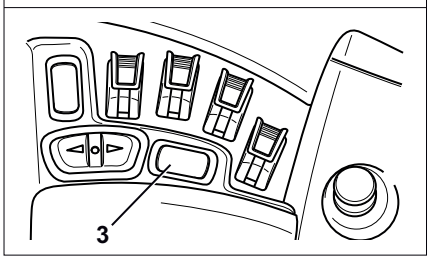

Lift cut-out limit stop (not acknowledge-able)

The lift cut-out limit stop prevents the lift mast being extended up to the maximum possible lift height. This helps to prevent lift mast collisions, for example, if the ceiling of the hall is lower than the maximum lift height of the truck.

The driver cannot cancel the lift cut-out limit stop.

Reach-lower lock (variant)

The reach/lower lock prevents the load forks from being lowered between the running wheel beams for the entire time that the reach carriage is in the retracted position. As a result, wide loads cannot accidentally come to rest on the running wheel beams during lowering and become unstable. The driver can override the cut out by pressing the acknowledge button (1) or by pressing the "F button"(2).

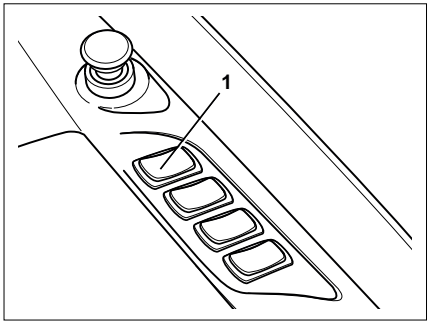

Placing loads down on the ground

– Lower the fork carriage to the interlock.

– Extend the reach carriage in the load direction to the stop.

– Fully lower the fork carriage.

When the reach carriage is fully extended, the fork carriage can be lowered fully without the lock. It is not then possible to retract the reach carriage. This prevents the load from being "stripped". The driver must first lift the load "free" again (to a height greater than 400 mm) or override the cut-out by pressing the acknowledge button.

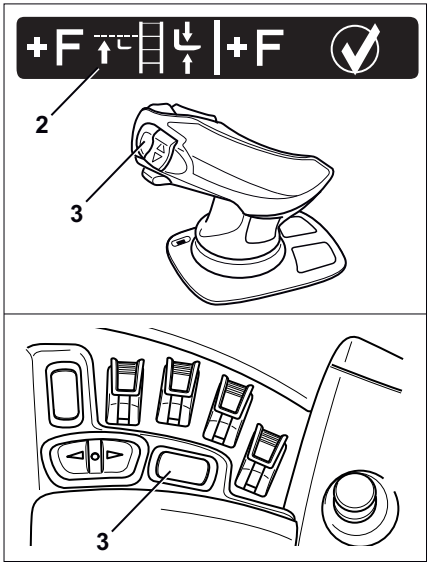

Overriding the reach/lower lock by pressing the acknowledge button:

- Press the acknowledge button (1) to override the cut out.

Overriding the reach/lower lock by pressing shift button "F":

- The adhesive label (2) indicates that the "F button" (3) is another option that can be used to acknowledge commands.

  Move the joystick or the relevant fingertip switch to the zero position. Within one second, press the "F button" and release it again to override the cut-out.

  If the "F button" is not pressed and then released within one second, the default function of the F button is restored automatically.

Automatic centre position (variant)

Automatic transition shift centre position ▷

The driver can use the "automatic transition shift centre position" function to position the transition shift in the centre automatically. To do this, the pushbutton must be actuated until the function switches off automatically. Depending on the truck version, either only the fork carriage (sideshift) or the entire lift mast (mast traversing) is positioned.

– Push the "transition shift/tilt centre position" pushbutton (1) on the right-hand side until the function switches off automatically.

The arrows (2) on the display and operating unit flash until the end position is reached.

The truck positions the transition shift in the centre position.

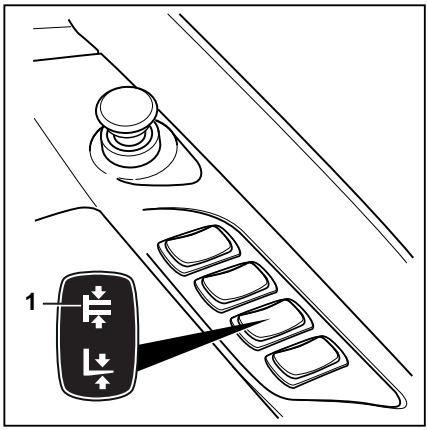

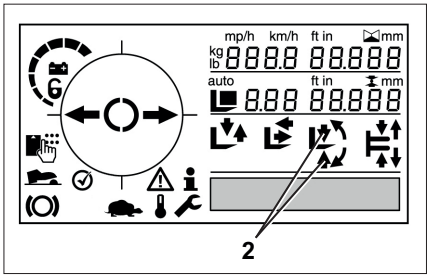

Automatic tilting centre position

The driver can use the "automatic tilt to centre position" function to change the tilt of the fork arms to 0° automatically. To do this, the pushbutton must be actuated until the function switches off automatically. Depending on the truck version, either only the fork carriage (fork tilter) or the entire lift mast (mast tilter) is positioned.

– Push the "transition shift/tilt centre position" pushbutton (1) on the left-hand side until the function switches off automatically.

The arrows (2) on the display and operating unit flash until the end position is reached.

The truck tilts the fork arms to the 0° position.

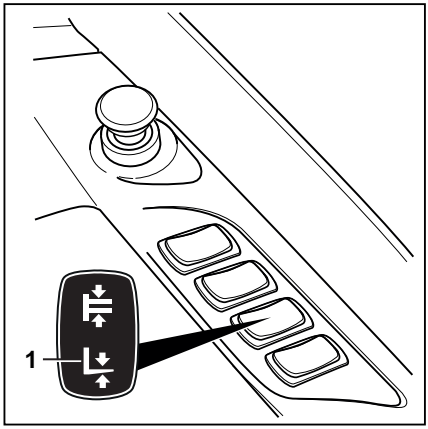

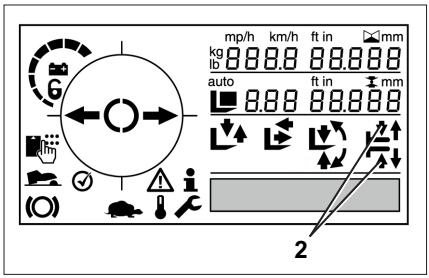

Additional button for automatic centre position (variant)

The automatic centre position transition shift/tilting can be set on two individual buttons as an option. The buttons are labelled with the symbols for the automatic centre position.

– To operate the automatic centre position, observe the symbols (1, 2) of the adjacent buttons.

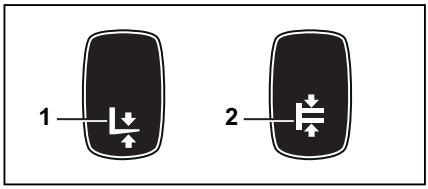

1 "Automatic tilt to centre position" symbol
2 "Automatic transition shift centre position" symbol

Speed limitation safety function

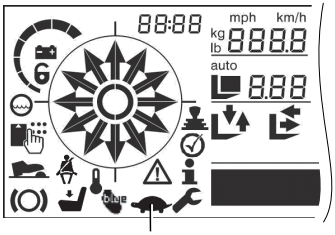

WARNING

There is always an increased risk of the truck tipping if it is driven with a raised load.

The system is a support for the driver when placing items into stock and removing items from stock. The responsibility for safe operation and complying with safety regulations remains with the driver.

In main lift load mode, the truck can only accelerate to a maximum of 6 km/h. If the current driving speed is already above this maximum speed, the truck brakes regeneratively to the set maximum speed. The speed limitation is removed as soon as the current lift height is lowered to below the specified value.

The speed limitation cannot be deactivated.

The maximum speed can be set to a value of between 1 km/h and 6 km/h by the authorised service centre.

While the maximum speed is being limited, the "tortoise" symbol (1) appears on the display-operating unit.

Changing the fork arms

DANGER

There is a risk of fatal injury from being run over if the truck rolls away.

- Do not park the truck on a gradient.
- Apply the parking brake.
- Change the fork arms in a separate, safe location on a level surface.

WARNING

There is a risk of injury when changing the fork arms; the fork arms' weight could cause them to fall on your legs, feet or knees. The space to the left and right of the fork is a danger area.

- Always wear protective gloves and safety footwear when changing the fork arms.
- Ensure that no one stands in the danger area!
- Do not pull on the fork arms.
- The fork arms must always be carried by two people; if necessary, use a hoist.

NOTE

- *For installation and removal, a transport pallet is recommended for supporting the fork arms. The pallet size depends on the fork arm size used and should be dimensioned such that the fork arms do not protrude after being placed on the pallet. This means the fork arms can be safely placed down and transported.*
- *Both fork arms can be pushed over onto one side.*

Removal

- Extend the reach carriage fully.
- Select a pallet corresponding to the fork arm size.
- Position the pallet to the left or right of the fork carriage.
- Raise the fork carriage until the lower edges of the fork arms are approx. 3 cm higher than the height of the pallet.
- Switch off the truck.
- Undo the locking screw (2) on the right or left.
- Pull the locking lever (1) upwards and push the fork arms outwards onto the pallet.

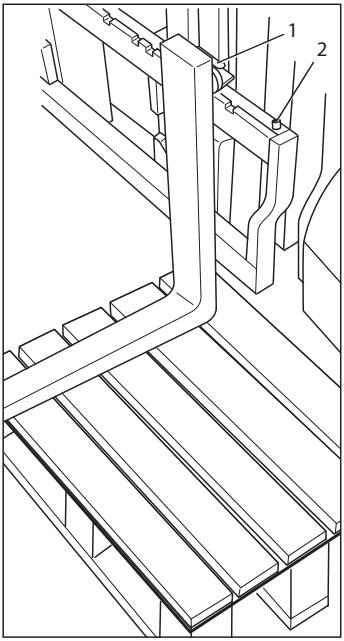

Installation

- Position the fork arms on a pallet to the left or right of the fork carriage.
- Pull the locking lever (1) upwards.
- Push the fork arms onto the fork carriage from the outside towards the centre.
- Move the fork arms into the desired position. Ensure that the locking lever snaps into place.
- Fit and tighten the locking screw (2).

⚠ DANGER

There is a risk to life caused by a falling load or fork!

- Tighten the locking screw after every fork replacement.
- It is not permitted to drive or transport loads without the locking screw.

Fork extension (variant)

DANGER

There is a risk of being run over if the truck rolls away, and therefore a danger to life.

- Do not park the truck on a gradient.
- Apply the parking brake.
- Change the fork extension in a separate, safe location on a level surface.

WARNING

There is a risk of crushing!

The weight of the fork extension can cause crushing or cuts on sharp edges or burrs.

- Always wear protective gloves and safety footwear.

WARNING

There is a risk of tipping!

The weight and dimensions of the fork extension affect the stability of the truck. The permissible weights stated on the capacity rating plate must be reduced in proportion to the actual load distance.

- Observe load capacity, see the "Before picking up a load" chapter.

Attachment

▷

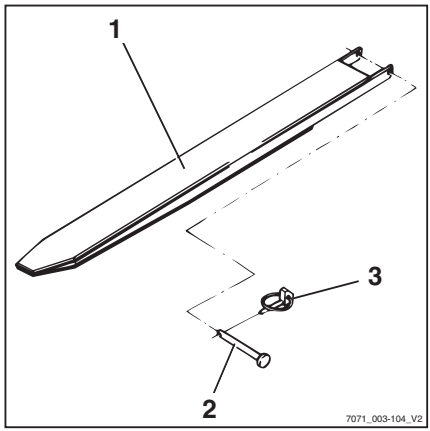

DANGER

Risk to life from falling load!

At least 60% of the length of the fork extension must lie on the fork arm. A maximum 40% overhang over the fork arm end is permissible. The fork extension must also be secured against slipping from the fork arm.

If the fork extension (1) is not secured with a securing bolt (2) and linch pin (3), the load with the fork extension may fall.

- Push the fork extension completely to the back of the fork.
- Make sure that 60% of the length of the fork extension is on the fork arm.
- Always secure the fork extension with a securing bolt.
- Always secure the securing bolt with a linch pin.

- Remove the linch pin (3) from the securing bolt (2).

- Remove the securing bolt from the fork extension (1).
- Push the fork extension onto the fork arms until it is flush with the fork back.
- Insert the securing bolts located behind the fork back fully into the fork extension.
- Insert the linch pin into the securing bolt and secure.

Removal

- Remove the linch pin (3) from the securing bolt (2).
- Remove the securing bolt from the fork extension (1).
- Pull the fork extension from the fork arms.
- Insert the securing bolt fully into the fork extension.
- Insert the linch pin into the securing bolt and secure.

Load backrest (variant)

The load backrest (1) prevents individual packages from falling backwards when stacking high loads.

▷

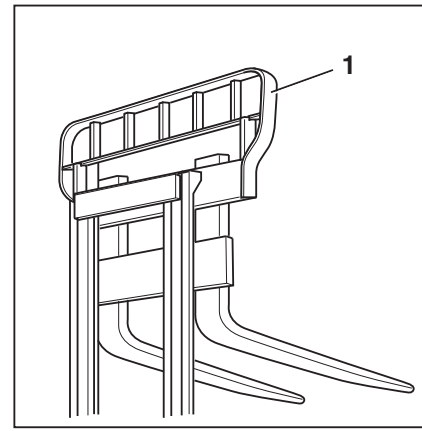

Working platforms

The use of working platforms in conjunction with industrial trucks is regulated by national law.

This legislation should be observed. The use of working platforms is only permitted by virtue of the legislation in the country of use. Before using working platforms, consult your national regulatory authorities.

WARNING

No one should ever stand on the forks to be raised or transported!

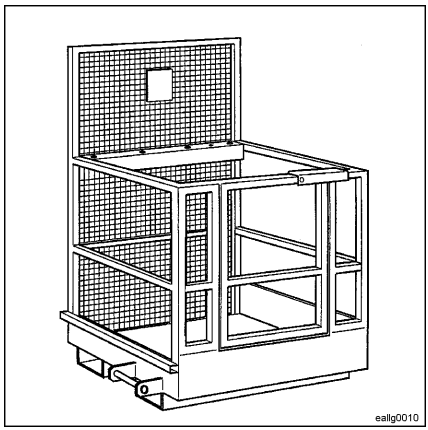

Malfunctions in lifting mode

Incorrect extension sequence

DANGER

Risk of accident!

With triple lift masts (variant), an incorrect extension sequence may occur, i.e. the inner lift mast may extend before the free lift has finished. As a result, the overall height is exceeded and damage can be caused when passing through entrances or in areas with low ceilings.

An incorrect extension sequence can be caused by the following:

- The hydraulic oil temperature is too low
- The fork carriage is blocked in the inner lift mast
- The free lift cylinder is blocked
- The chain roller for the free lift cylinder is blocked

– If the hydraulic oil temperature is too low, slowly actuate the lift mast functions several times in order to raise the oil temperature.

In the event that the fork carriage is blocked in the inner lift mast, or the free lift cylinder or chain roller are blocked, the cause of the blockage must be eliminated before resuming work.

– Notify the authorised service centre.

Load chains not under tension

⚠ DANGER

Danger caused by a falling load!

– Make sure that the chains do not become slack when lowering the load.

Slack chains can be caused by the following:

- The fork carriage or the load is resting on the racking
- The fork carriage rollers are blocked in the lift mast due to contamination

– If the fork carriage or the load comes to an unexpected stop, lift the fork carriage until the chains are under tension again and lower the load at another suitable location.

– If the fork carriage rollers are blocked in the lift mast due to contamination, lift the fork carriage until the chains are under tension again. Remove the contamination before resuming work.

⚠ WARNING

Risk of injury!

– Observe the safety regulations for working on the lift mast, see the chapter entitled "Working at the front of the truck".

Handling loads

Safety regulations when handing loads

The safety regulations for handling loads are shown in the following sections.

DANGER

There is a risk to life caused by falling loads or if parts of the truck are being lowered.

- Never walk or stand underneath suspended loads or raised fork arms.
- Never exceed the maximum load indicated on the capacity rating plate. Otherwise stability cannot be guaranteed!

DANGER

Risk of accident from falling or crushing!

- Do not step onto the forks.
- Do not lift people.
- Never grab or climb on moving parts of the truck.

DANGER

Risk of accident from a falling load!

- When transporting small items, attach a load safety guard (variant) to prevent the load from falling on the driver.
- Use a closed roof covering (variant) in addition.

▷

Before picking up a load

Load capacity

The load capacity indicated for the truck on the capacity rating plate must not be exceeded. The load capacity is influenced by the load centre of gravity and the lift height as well as by the tyres, if applicable.

The position of the load capacity rating plate can be determined from the identification points; see the chapter entitled "Identification points".

⚠ WARNING

The figures show examples.

Only the capacity rating plates on the truck are valid!

The attachment of additional weights to increase load capacity is prohibited.

⚠ DANGER

Risk to life from the truck losing stability!

Never exceed the maximum loads shown! These values apply to compact and homogeneous loads. Otherwise, the stability as well as the rigidity of the fork arms and lift mast cannot be guaranteed.

Improper or incorrect operation or the placement of persons to increase load capacity is prohibited.

Example

Weight of load to be lifted (1)

Permissible lift height (2)

Load distance from fork back (3)

WARNING

Risk of accident from the truck losing stability!

The permissible loading of the attachments (variant) and the reduced load capacity of the combination of truck and attachment must not be exceeded.

– Observe the special capacity rating plate information shown on the truck and the attachment.

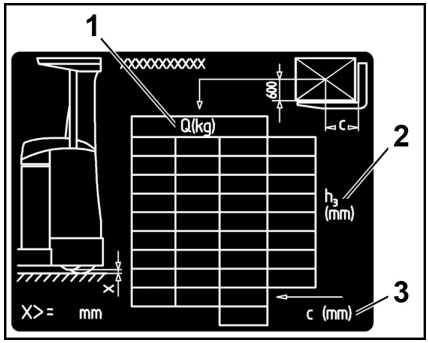

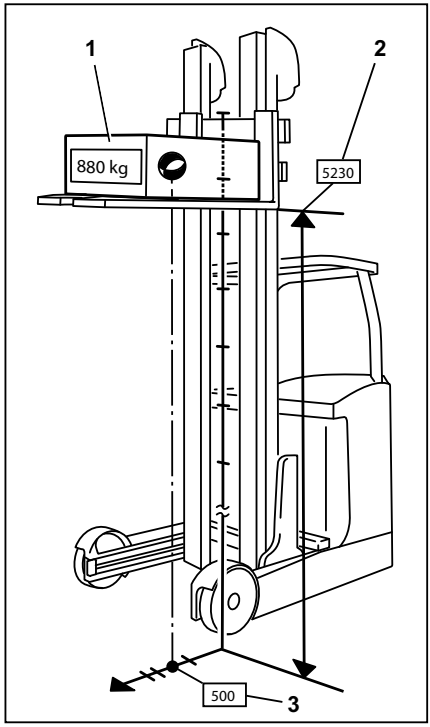

Picking up loads

To make sure that the load is securely supported, it must be ensured that the fork arms are sufficiently far apart and are positioned as far as possible under the load.

If possible, the load should rest on the back of the fork.

The load must not protrude too far over the fork tips, nor should the fork tips protrude too far out from the load.

Loads must be picked up and transported as close to the middle as possible.

If the length of the fork arms is not matched to the depth of the load, this increases the risk of accidents. If the fork arms are too short, the load may fall off the arms after it has been picked up. In addition, be aware that the load centre of gravity may shift as a result of dynamic forces such as braking. A load which is otherwise resting safely on the fork arms may move forward and fall. However, If the fork arms are too long they can catch on loading units behind the load, which then fall over when the load is raised. For help with selecting the correct length of fork arms, contact a qualified service engineer.

⚠ DANGER

Risk of accident from falling load!

When transporting small items, attach a load backrest (variant) to prevent the load from falling on the driver.

A closed roof covering (variant) should also be used.

Removable roof panels must not be removed.

Adjusting the fork

▷

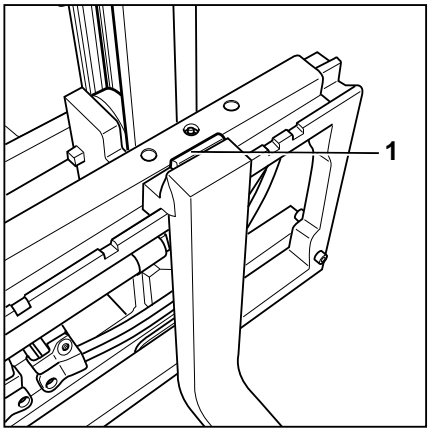

- Lift the locking lever (1) and move the fork arms to the desired position.
- Allow the locking lever to snap back into place.

The load centre of gravity must be midway between the fork arms.

- Only actuate the fork prong positioner (variant) when the fork is not carrying a load.

Danger area

The danger area is the area in which people are at risk due to the movements of the truck, its working equipment, its load-carrying equipment (e.g. attachments) or the load. Also included are the areas where loads could fall or working equipment could fall or be lowered.

DANGER

Risk of injury!

– Do not step on the fork.

DANGER

Risk of injury!

– Do not step under the raised forks.

DANGER

People may be injured in the danger area of the truck!

The danger area of the truck must be completely clear of all personnel, except the driver in his normal operating position. If persons fail to leave the danger area despite warnings:

– Cease work with the truck immediately.
– Secure the truck against use by unauthorised parties.

DANGER

Danger of death from falling loads!

– Never walk or stand underneath suspended loads.

Transporting pallets

As a rule, loads (e.g. pallets) must be transported individually. Transporting multiple loads at the same time is only permitted:

- when instructed by the supervisor and
- when the technical requirements have been met.

The driver must ensure proper condition of the load. Only safely and carefully positioned loads may be transported.

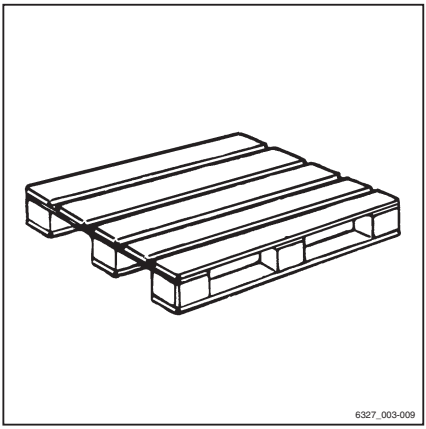

Transporting suspended loads

Before transporting suspended loads, consult the national regulatory authorities (in Germany, the employer's liability insurance associations).

National regulations may place restrictions on these operations. Contact the relevant authorities.

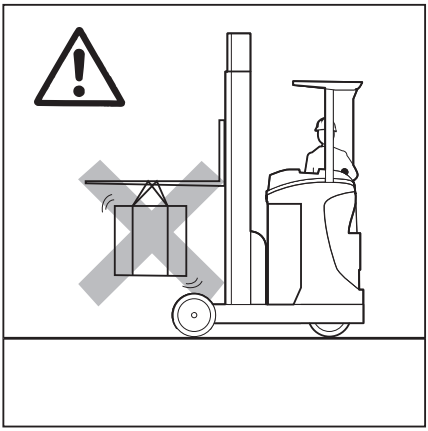

DANGER

Swinging loads can result in the following risks:

- Impaired braking and steering movement
- Tipping over the load wheels or drive wheels
- Tipping the truck at right angles to the drive direction
- Risk of crushing of accompanying persons
- Reduced visibility

DANGER

Loss of stability!

Slipping or swinging suspended loads can lead to a loss of stability and cause the truck to tip over.

– When transporting suspended loads, observe the following instructions.

Instructions for transporting suspended loads:

- Swinging of the load is to be prevented by using the proper driving speed and driving manner (careful steering, braking).
- Hanging loads must be coupled to the truck in such a way that the harness cannot shift or release unintentionally, and cannot be damaged.
- When transporting suspended loads, suitable devices (e.g. guy wires or supporting poles) must be available so that accompanying persons can guide suspended loads and prevent the loads from swinging
- Take particular care to ensure that there is no one in the drive direction in the driving lane.
- If, despite this, the load begins to swing, ensure that no person is placed at risk

⚠ DANGER

Risk of accident!

When transporting suspended loads, never perform or end driving and load movements abruptly.

Never drive on ascending or descending gradients with a suspended load!

It is not permissible to transport containers holding fluids as hanging loads.

Picking up a load

NOTE

Loads may only be picked up and set down on flat surfaces.

⚠ DANGER

There is a risk to life caused by a falling load or if parts of the truck are being lowered.

– Never walk or stand underneath suspended loads or raised fork arms.
– Never exceed the maximum load indicated on the capacity rating plate. Otherwise stability cannot be guaranteed.

Only store pallets that do not exceed the permissible measurements. Damaged loading equipment and incorrectly formed loads must not be stored. Store the load so that the spec-

ified aisle width is not reduced by protruding parts.

– Approach the racking carefully, brake gently and stop just in front of the racking.

– Tilt the fork arms or lift mast until the fork arms are horizontal. ▷

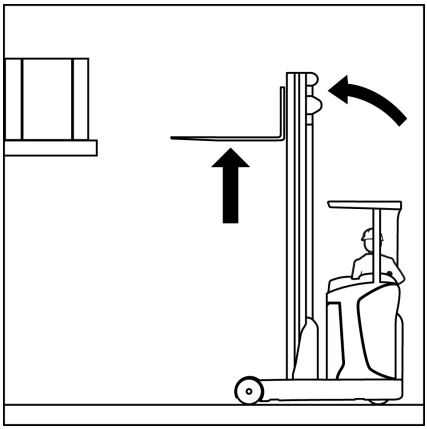

– Raise the fork carriage to a position for clear entry into the pallet or load.

– Release the brake.

– Drive up to the racking until the truck chassis is as close as possible.

– Brake.

– Extend the reach carriage until the fork back is resting on the load. ▷

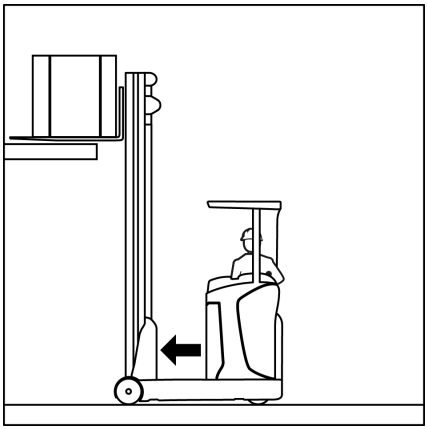

The load centre of gravity must be midway between the fork arms.

– Slowly raise the fork carriage until the load is lifted clear of the racking.

– Tilt the fork tips or lift mast to the drive side only as far as necessary to stabilise the load.

– Retract the reach carriage fully. ▷

– Release the brake.

⚠ DANGER

Risk of accident!

– Beware of any people in the danger area.

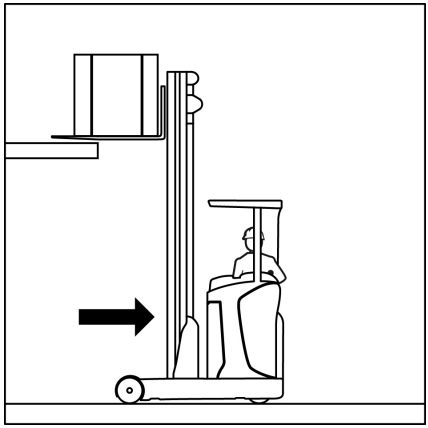

– Ensure that the roadway on the drive side is clear. Move backwards carefully and slowly until the load is clear of the racking. ▷

– Brake.

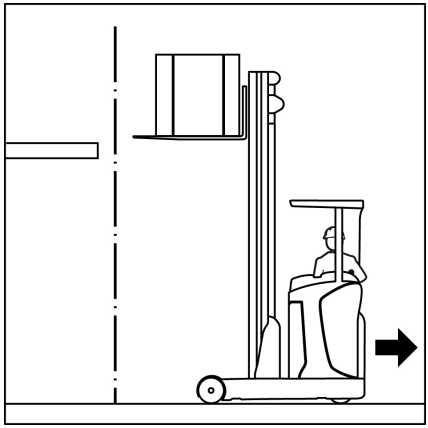

– Lower the load carefully while maintaining ground clearance. Lower wider loads that do not fit between the load wheel posts only until they are not resting on the posts. ▷

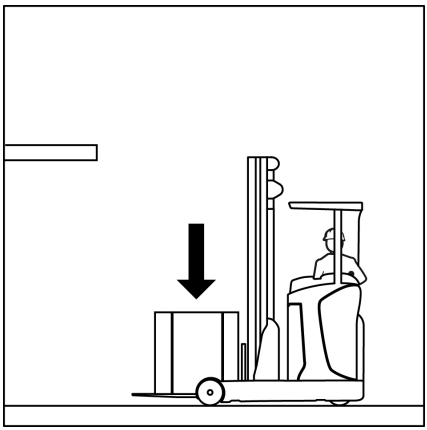

– Tilt the fork tips or lift mast fully to the drive side into the driving position. ▷
– Release the brake.

The load can be transported; see the chapter entitled "Transporting loads".

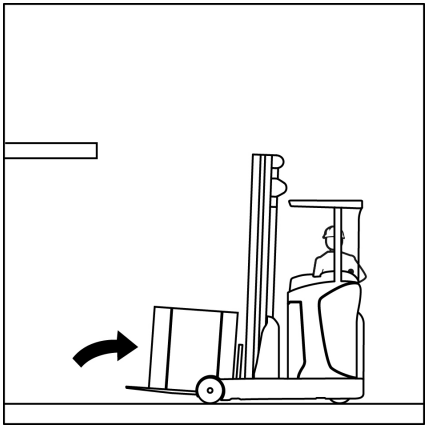

Transporting loads

NOTE

Observe the information in the chapter entitled "Safety regulations when driving".

DANGER

The higher a load is lifted, the less stable it becomes. The truck can tip over or the load can fall, increasing the risk of accident!

Driving with a raised load and the lift mast tilted forward is not permitted.

- Only drive with the load lowered.
- Lower the load until ground clearance is reached (lift height below 500 mm).
- Only drive with the lift mast tilted backwards.

When travelling, the reach carriage must be fully retracted and the fork carriage lowered until just above the load wheel legs. ▷

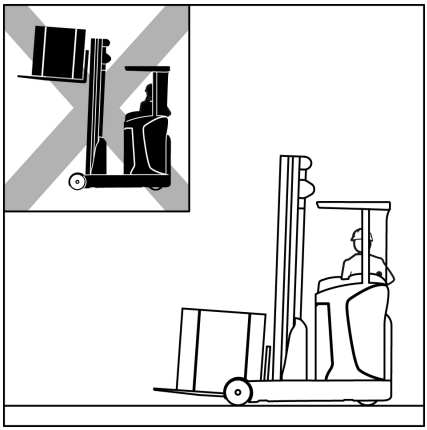

If possible, always travel on roadways in the drive direction, as the load side view is restricted by the lift mast and the load. If visibility is poor, let someone guide you.

- Drive slowly and carefully around corners. ▷

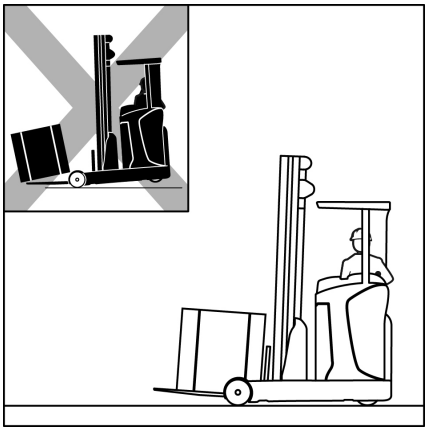

Speed must be reduced on uneven or wet surfaces or when visibility is restricted.

NOTE

Observe the information in the chapter entitled "Steering".

- Always accelerate and brake gently.

NOTE

Observe the information in the chapter entitled "Operating the service brake".

– Never drive with a load protruding on one side or with a load shifted to the side (sideshift). The centre of gravity of the load must always be positioned on the longitudinal axis of the truck.

▷

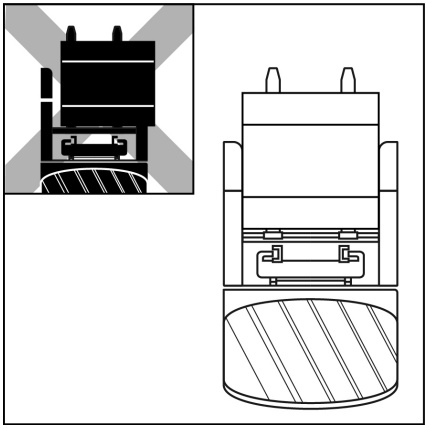

Setting down loads

▷

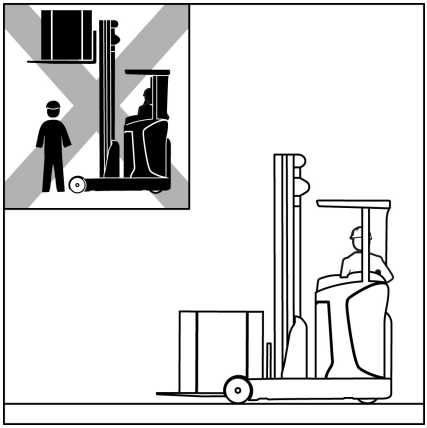

DANGER

Risk of accident due to changed moment of tilt!

Please note that when the load is raised the lift mast can be tilted far enough forward to cause the truck to tip over.

The load centre of gravity and the moment of tilt both change when the load slips. The truck may tip forwards.

– Only tilt the lift mast forwards with a raised lifting accessory when it is directly above the stack.
– When the lift mast is tilted forwards, take particular care to ensure that the truck does not tip forwards and that the load does not slip.

WARNING

Risk of accident from falling load!

If the fork or the load remains suspended during lowering, the load may fall.

– When removing from stock, move the truck far enough back so that the load and the fork can be lowered freely.

– With the load lowered in accordance with regulations, approach the racking and align the load as accurately as possible.
– Brake.
– Tilt the fork arms or lift mast until the fork arms are horizontal.

- Raise the load to just above the required height.
- If necessary operate the sideshift to position the load centrally.
- Extend the reach carriage fully.
- Release the brake.
- Drive up to the racking so the truck chassis is as close as possible until the load can be lowered into its final position.
- Brake.
- Slowly lower the fork carriage until the load is positioned on the racking.
- Retract the reach carriage fully.
- Ensure that the roadway on the drive side is clear. Move the truck back carefully and slowly until the fork arms can be lowered without touching the racking.
- Lower the fork carriage until the necessary ground clearance is achieved.
- Tilt the fork tips or lift mast fully to the drive side into the driving position.

▷

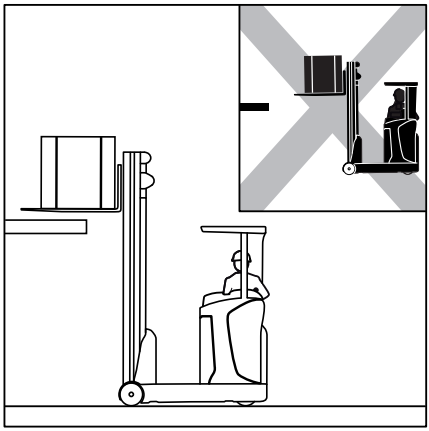

Driving on upward and downward gradients

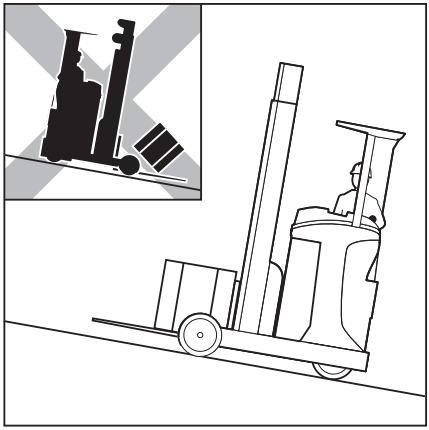

DANGER

Danger to life!

On upward and downward gradients, the load must be carried facing uphill.

It is only permitted to drive on upward and downward gradients if they are marked as traffic routes and can be used safely.

The driver must check that the ground is clean with a good grip.

It is not permitted to perform turns on upward gradients, to approach them diagonally or to park the truck on them.

Drive at a reduced speed on downward gradients.

It is not permitted to put items into stock or to remove them from stock while on an upward or downward gradient.

The forklift truck must not be parked on a slope.

– In case of emergency, secure the truck with wedges.

The truck must not be used on upward and downward gradients with values that exceed those specified in the chapter entitled "Roadways".

Driving onto lifts

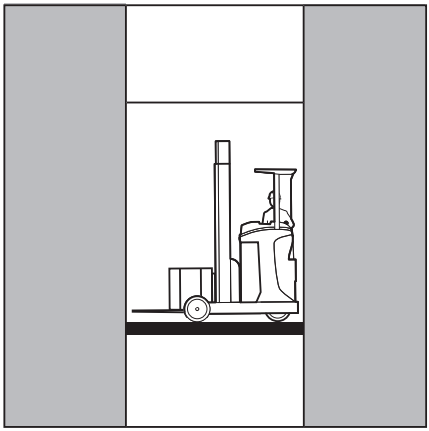

Do not drive the truck into a lift without specific authorisation. The driver may only use this truck on lifts with a sufficient load capacity and for which the operating company has been granted authorisation (refer to the chapter entitled "Definition of responsible persons").

DANGER

There is a risk to life from being crushed or run over by the truck.

– There must be no personnel already in the lift when the truck is driven into the lift.

– Personnel are only permitted to enter the lift once the truck is secure, and must exit the lift before the truck is driven out.

Determining the total actual weight

- Park the truck securely.
- Determine the unit weights by reading the truck nameplate and, if necessary, the attachment (variant) nameplate and, if necessary, by weighing the load to be lifted.
- Add the determined unit weights to obtain the total actual weight of the truck:

  Tare weight (1)

  \+ Max. permissible battery weight (2)

  \+ Ballast weight (variant) (3)

  \+ Attachment net weight (variant)

  \+ Weight of the load to be lifted

  \+ 100 kg allowance for driver

  = Total actual weight

- Drive the truck with the forks forwards into the lift without touching the shaft walls.
- Park the truck securely in the lift to prevent uncontrolled movements of the load or the truck.

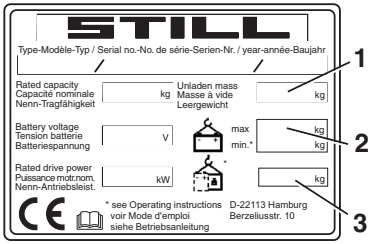

Attachments

Fitting attachments

If the truck is equipped with an integrated attachment (variant) at the factory, the specifications in the STILL operating instructions for integrated attachments must be observed.

If attachments are fitted at the place of use, the specifications in the operating instructions of the attachment manufacturer must be observed.

If an attachment is not delivered together with the forklift truck, the specifications and operating instructions of the attachment manufacturer must be observed.

Before initial commissioning, the function of the attachment and the visibility from the driver's position with and without a load must be checked by a competent person. If the visibility is deemed insufficient, visual aids such as mirrors, a camera/monitor system etc. must be used.

In addition, it is essential that the warnings below are observed.

⚠ CAUTION

Attachments must be CE-certified. If the truck is not fitted with an attachment-specific residual load capacity rating plate and the operating devices are not marked with corresponding pictograms, the truck must not be used.

- Order the residual load capacity rating plate and pictograms from your authorised service centre in good time.
- The authorised service centre must adapt the hydraulic system to the requirements of the attachment (e.g. by adjusting the pump motor speed).

DANGER

There is risk to life caused by a falling load!

Attachments that hold the load by exerting pressure on it (e.g. clamps) must be controlled additionally by a second operating function (lock) that is actuated to prevent an unintentional release of the load.

If such an attachment is retrofitted, a second operating function for actuation must also be retrofitted.

– Make sure that the additional clamp locking mechanism function is available.

DANGER

There is risk to life caused by a falling load!

During installation of a clamp with integral sideshift, ensure that the clamp does not open when the sideshift is actuated.

– Notify your authorised service centre before installation.
– Never grab or climb on moving parts of the truck.

Hydraulic connection

– Before installing the attachment, release the pressure from the hydraulic system.

CAUTION

Risk of damage to components!

Open connections of plug connectors can become dirty. The plug connectors can become stiff and dirt can enter the hydraulic system.

– Once the attachment has been disassembled, attach the protective caps to the plug connectors.

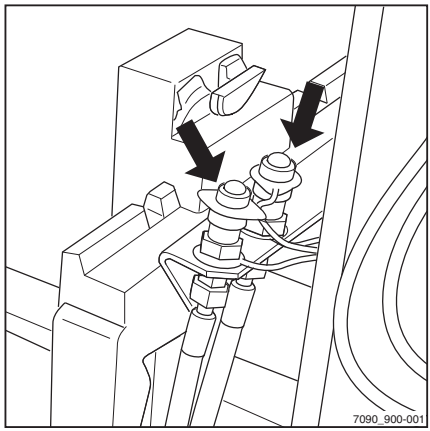

Mounting attachments

Mounting an attachment and connecting the energy supply for an attachment must only be performed by competent persons in accordance with the information provided by the manufacturer and supplier of the attachment. After each installation, the attachment must be checked for correct function prior to initial commissioning.

NOTE

Please observe the definition of the following responsible person: "competent person".

Load capacity with attachment

The permissible load capacity of the attachment and the allowable load (load capacity and load moment) of the truck must not be exceeded by the combination of attachment and payload. The specifications of the manufacturer and supplier of the attachment must be complied with.

– Observe the residual load capacity rating plate, see the chapter entitled "Taking up a load using attachments".

Releasing the pressure from the auxiliary hydraulics

Attachments must only be fitted by competent persons in accordance with the information provided by the manufacturer and supplier of the attachments. After each installation, the attachment must be checked for correct function prior to initial commissioning.

Prior to assembling attachments, the pressure must be released from the plug connectors (arrows).

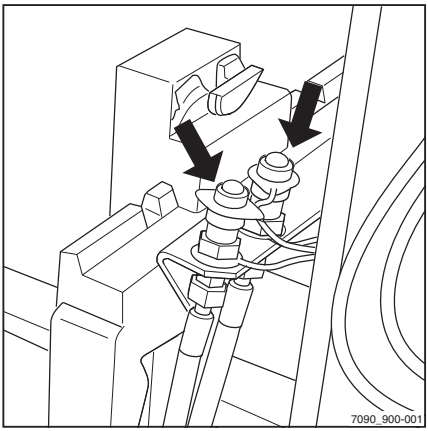

Performing the truck function "Release the pressure from the hydraulics"

– Fully lower the lift mast and fork carriage. In doing so, wait until the lift mast, which is braked by the mast slowdown at the end of the lowering process, is fully lowered.

– Rest the fork tips fully on the ground by tilting.

– Switch off the key switch.

– Wait for five seconds, then switch on the key switch.

– Using your left hand, press and hold the ESC button (2) **immediately** after switching on the truck.

– If present, operate the foot switch.

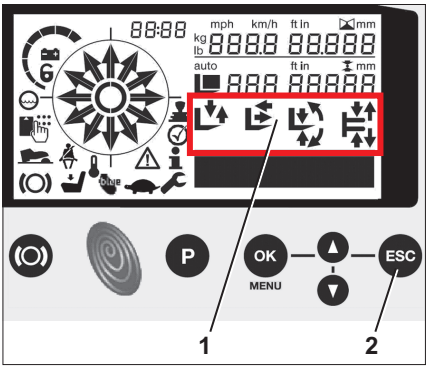

After approx. one second, all of the assistance arrows (1) will flash.

DANGER

When activating the valves for the purpose of depressurising the hydraulic lines, unexpected hydraulic movements may occur.

The "release the pressure from the hydraulics" truck function can be used to depressurise the entire hydraulic system. For example, this means that the fork may lower faster than expected when the "lowering" function is performed.

– Ensure that there are no people or objects in the vicinity of the reach carriage, the lift mast or the fork.

– Using your right hand, activate the auxiliary hydraulics to release the pressure from the hydraulic lines. The control of the auxiliary hydraulics is dependent on the operating devices (joystick, fingertip switch) and their configuration, refer to the chapter entitled "Lifting system operating devices".

– Release the ESC button and foot switch. For trucks without a foot switch, releasing the ESC button will suffice.

The assistance arrows will stop flashing. The hydraulic system is switched off and remains deactivated until the next time the truck is started.

– To re-activate the hydraulics, switch the key switch off and on again.

General instructions for controlling attachments

The way in which attachments (variant) are controlled depends on the operating devices included in the truck's equipment. Essentially, a distinction is drawn between:

- **Joystick 4Plus**, refer to the chapter entitled "Controlling attachments using the joystick 4Plus (5th/6th hydraulic function)"
- **Fingertip**, see the chapter entitled "Controlling attachments using the fingertip (5th/6th hydraulic function)"

WARNING

Use of attachments can give rise to additional hazards such as a change in the centre of gravity, additional danger areas etc.

Attachments must only be used for their intended purpose as described in the relevant operating instructions. Drivers must be taught how to operate the attachments.

Loads may only be picked up and transported with attachments if the loads are securely grasped and attached. Where necessary, loads must also be secured against slipping, rolling away, falling over, swinging or tipping over. Note that any change to the position of the load centre of gravity will affect the stability of the truck.

– Refer to the capacity rating plate for the attachments being used.

NOTE

Further variants and functions are available in addition to the functions described below. The directions of movement can be seen on the pictograms on the operating devices or battery hood.

NOTE

All the attachments described fall into the category of equipment variants. An exact description of the respective movements/actions of the attachment fitted can be found in the respective operating instructions.

Controlling attachments (variant) using the joystick 4Plus (5th/6th hydraulic function)

The designation "5th/6th function" refers to the fact that the four operating levers control four functions, while additional functions can be controlled by switching functions.

In this version, the attachments are controlled using a joystick.

For operating attachments, the following is generally involved:

The pictogram (3) on the base of the joystick shows the function in each case and how it is controlled using the joystick (2).

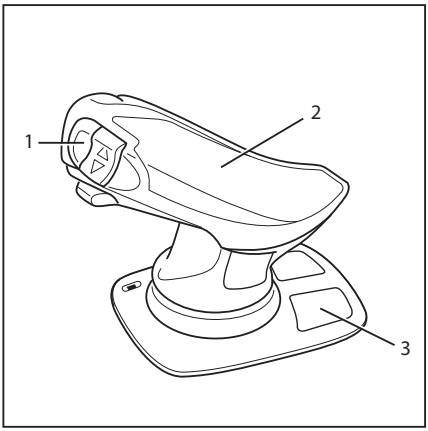

– Actuate the shift button "F"(1).

– Move the joystick in the direction of the arrow "4" or "5". **Or:**

– Move the vertical rocker button (6) to the left or right.

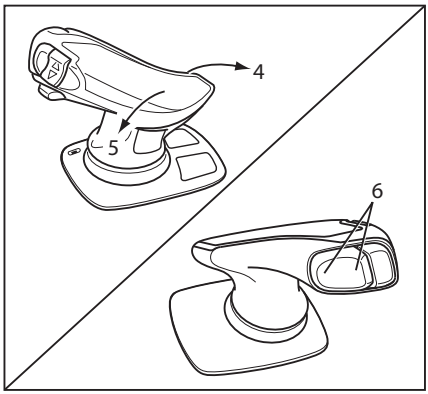

NOTE

The movement/action of these additional functions can be found in the operating instructions of the fitted attachment.

NOTE

The pictograms on the joystick are applied according to the attachments fitted to this truck at the factory. If an attachment with other functions is fitted, the pictograms must be checked for the correct representation and changed if necessary. Please contact the service centre if necessary.

– Note the following attachment functions and pictograms!

Overview of pictograms and operating devices

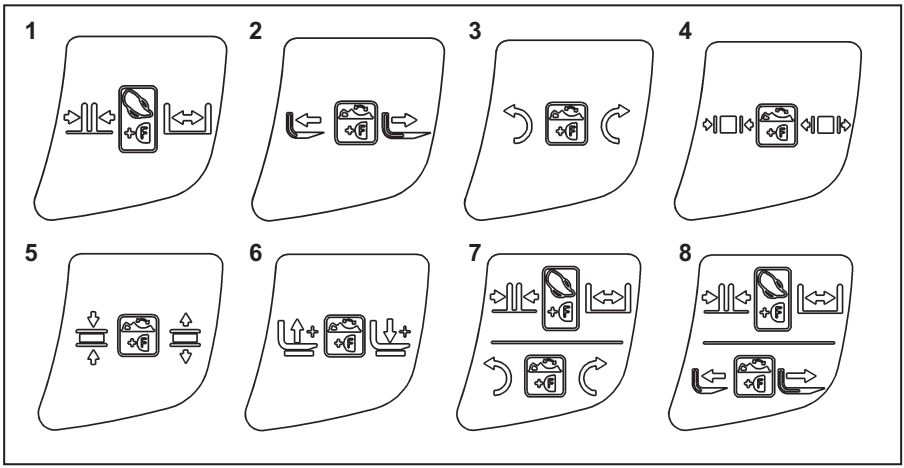

No.	Operating device	Function of the attachment
1	Joystick + shift button "F"	Fork prong positioner: close/open
2	Vertical rocker button + shift button "F"	Fork positioner: forwards/backwards
3	Vertical rocker button + shift button "F"	Rotator: left/right
4	Vertical rocker button + shift button "F"	Clamp: close/open
5	Vertical rocker button + shift button "F"	Load retainer: close/open
6	Vertical rocker button + shift button "F"	Additional fork carriage: lift/lower
7	Joystick + shift button "F"	Fork prong positioner: close/open
	Vertical rocker button + shift button "F"	Rotator: left/right
8	Joystick + shift button "F"	Fork prong positioner: close/open
	Vertical rocker button + shift button "F"	Fork positioner: forwards/backwards

In the pictograms for possible attachments, the outlined graphic in the centre of the pictogram indicates the combination of operating devices required for the particular attachment.

Controlling attachments (variant) with the fingertip (5th/6th hydraulic function)

▷

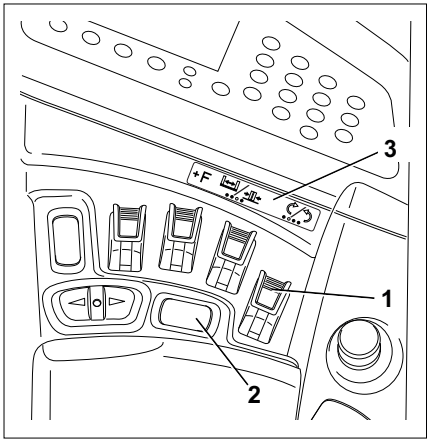

The designation "5th/6th function" refers to the fact that the four operating levers control four functions, while additional functions can be controlled by switching functions.

In this version, the attachments are controlled using the operating levers (1).

You can also use the switch (2) to switch functions. The operating lever marked with a corresponding pictogram then controls the 5th/6th function.

The left and right parts of the pictogram (3) behind the operating lever show the function that is controlled with this lever.

This essentially involves the following:

Move the operating lever forwards.

- The attachment moves in the direction shown in the left part of the pictogram.

Move the operating lever backwards.

- The attachment moves in the direction shown in the right part of the pictogram.

– Actuate the switch (2).

The additional function of the attachment is activated/deactivated and can be controlled as an additional function using the operating lever.

– Actuate the operating lever (1) in order to control the attachment.

NOTE

The movement/action of these additional functions can be found in the operating instructions of the fitted attachment.

NOTE

The pictograms for the operating levers are attached according to the attachments fitted to this truck at the factory. If an attachment with other functions is fitted, the pictograms must be checked for the correct representation and

changed if necessary. Please contact the authorised service centre if necessary.

Overview of the pictograms

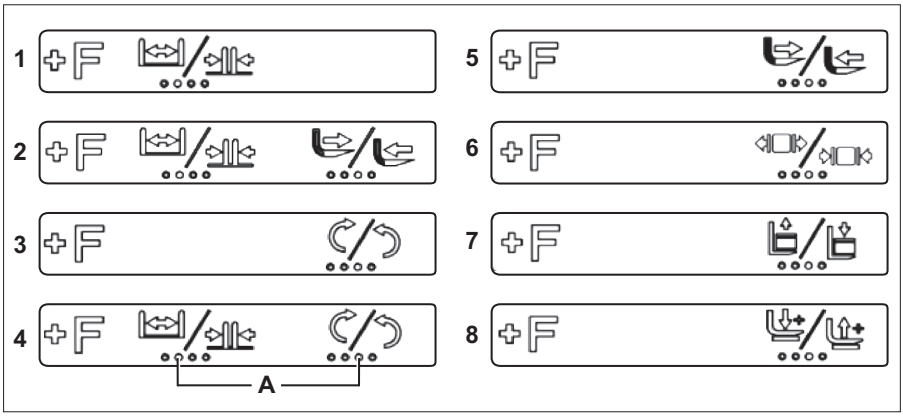

A Fingertip switch that performs the indicated function

– Note the following attachment functions and pictograms!

No.	Function of the attachment
1	Fork prong positioner: close/open
2	Fork prong positioner: close/open
	Fork positioner: forwards/backwards
3	Rotator: left/right
4	Fork prong positioner: close/open
	Rotator: left/right
5	Fork positioner: forwards/backwards
6	Clamp: close/open
7	Load retainer: close/open
8	Additional fork carriage: lift/lower
A	Fingertip switch that performs the indicated function (1-2-3-4)

Operating the clamp locking mechanism (variant) with a joystick 4Plus

This truck can be fitted with a clamp locking mechanism as a variant. This prevents the clamp from opening unintentionally if the operating function is inadvertently triggered.

DANGER

There is a risk of fatal injury from falling loads if the correct function of the clamp locking mechanism is not guaranteed!

If other attachments are used on this truck in addition to the clamp, make sure that the clamp locking mechanism function is reassigned to the corresponding operating device every time the clamp is reassembled; see the chapter entitled "Fitting attachments".

– Make sure that the additional clamp locking mechanism function is available.

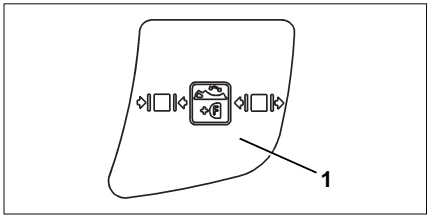

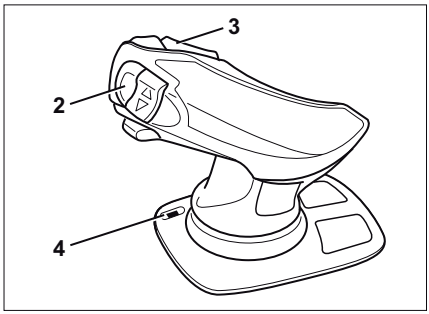

NOTE

The joystick actuation that has the "clamp release" function assigned to it is (1) marked by a pictogram; also refer to the chapter entitled "Working with attachments".

Closing the clamp with the joystick 4Plus

It is not necessary to release the clamp locking mechanism in order to close the clamp. Proceed as follows to close the clamp:

– Press and hold shift button "F" (2) and move the horizontal rocker button (3) to the left.

Opening the clamp with the joystick 4Plus

To open the clamp, the clamp locking mechanism must first have been unlocked. Proceed as follows to unlock the clamp locking mechanism:

– Press and hold shift button "F" (2) and move the horizontal rocker button (3) to the right.

– Keep shift button "F" depressed and move the horizontal rocker button back into the neutral position.

The LED (4) indicating the clamp locking mechanism has been unlocked lights up and the clamp can now be opened. If the clamp locking mechanism is locked again, the LED will go out.

– To open the clamp, press and hold shift button "F" and move the horizontal rocker button to the right again.

NOTE

The clamp locking mechanism is locked again:

- as soon as shift button "F" is released
- if the clamp is not opened within a specified period of time

Operating the clamp locking mechanism (variant) with the fingertip switch

This truck can be fitted with a clamp locking mechanism as a variant. This prevents the clamp from opening unintentionally if the operating function is inadvertently triggered.

DANGER

There is a risk of fatal injury from falling loads if the correct function of the clamp locking mechanism is not guaranteed!

If other attachments are used on this truck in addition to the clamp, make sure that the clamp locking mechanism function is reassigned to the corresponding operating device every time the clamp is reassembled; see the chapter entitled "Fitting attachments".

– Make sure that the additional clamp locking mechanism function is available.

NOTE

The operating lever that has the "clamp release" function assigned to it is (1) marked by a pictogram; also refer to the chapter entitled "Working with attachments".

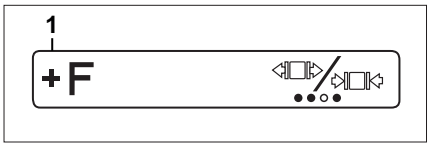

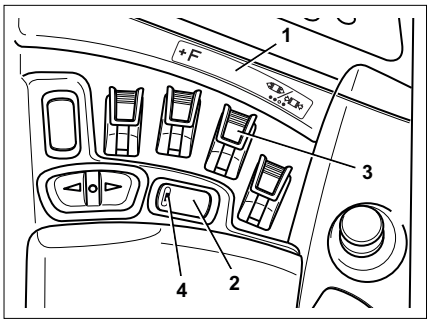

Closing the clamp with the fingertip switch

It is not necessary to release the clamp locking mechanism in order to close the clamp. Proceed as follows to close the clamp:

– Press and hold shift button "F" (2) and move the operating lever (3) backwards.

Opening the clamp with the fingertip switch

To open the clamp, the clamp locking mechanism must first have been unlocked. Proceed as follows to unlock the clamp locking mechanism:

– Press and hold shift button "F" (2) and move the operating lever (3) forwards.

– Keep shift button "F" depressed and move the operating lever back into the neutral position.

The LED (4) indicating the clamp locking mechanism has been unlocked lights up and the clamp can now be opened. If the clamp locking mechanism is locked again, the LED will go out.

– To open the clamp, press and hold shift button "F" and move the operating lever forwards again.

NOTE

The clamp locking mechanism is locked again:

- as soon as shift button "F" is released
- if the clamp is not opened within a specified period of time

Picking up a load using attachments ▷

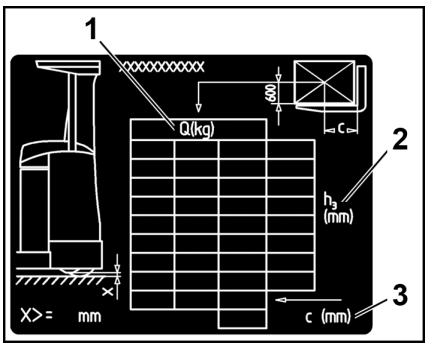

WARNING

Risk of accident!

Attachments must only be used for their intended purpose as described in the relevant operating instructions.

Drivers must be taught how to operate the attachments.

WARNING

Risk of accident!

Loads may only be picked up and transported with attachments if they are securely grasped and attached. Where necessary, loads must also be secured against slipping, rolling, falling over, swinging or tipping over. Note that any change to the position of the load centre of gravity will affect the stability of the truck.

Check the capacity rating plates for the attachments or combination of attachments.

– The rating plates show the permissible values for:

- Load capacity Q (kg) (1)
- Lift height h (mm) (2)
- Load distance C (mm) (3)

Auxiliary equipment

FleetManager (variant)

FleetManager is an equipment variant and can be fitted to the truck in different versions. The description and operating information can be found in the separate operating instructions for the corresponding FleetManager versions.

FleetManager regulates the access authorisation for the truck. To activate the access control, FleetManager must be put into operation immediately following delivery.

– To do this, observe the information in the chapter entitled "Activating the access control after delivery of the truck".

Shock recognition (variant)

The shock recognition is an equipment variant of the FleetManager (variant) in which an acceleration sensor is installed in the truck. The acceleration sensor records the data generated in the event of a shock (e.g. in the case of a collision). This data can be electronically read out and evaluated.

– Contact the authorised service centre for more information.

Active Load Stabilisation ALS (variant)

⚠ CAUTION

Risk of accident due to collision of the lift mast or load with the racking or low ceilings.

Active vibration damping of the lift mast changes the vibration characteristics of the lift mast and load in comparison to the standard truck.

– When handling loads, take the varying vibration characteristics into consideration.

⚠ CAUTION

Risk of accident due to failure of active vibration damping of the lift mast.

If active vibration damping of the lift mast fails, the vibration characteristics of the lift mast and load will change. Even if vibration damping of the lift mast is inactive, the driver can still operate all of the truck's hydraulic functions.

- If active vibration damping fails, take the change in vibration characteristics into consideration.
- Complete the stock placement/removal process without the support of active vibration damping.
- Park the truck securely.
- Notify the authorised service centre.

Active vibration damping of the lift mast helps the driver when placing loads into stock and removing loads from stock at great lift heights. The hydraulic damping system suppresses load vibrations and thus shortens the stock placement and removal times.

The system operates permanently in the truck and can only be enabled or disabled by the authorised service centre.

If the lift mast or the load demonstrates unexpected vibration characteristics, notify the authorised service centre.

Optical height measuring system (variant)

This truck is equipped with an optical height measuring system. The system is immediately available after the truck is switched on.

The components are located to the side on the lift mast. The system consists of a compact LED/sensor unit on the lift mast frame and a reflector on the fork carriage.

The LED height sensor (1) sends a light signal. The signal is reflected by the reflector (2). The truck calculates the lift height based on the time taken for the light signal to travel.

The current lift height (3) is permanently displayed in the display. The displayed lift height corresponds to the height of the upper edge of the fork. A different value can be set by the authorised service centre.

The system functions across the entire fork lift height, from ground level up to the maximum lift height of the truck. When used properly, the measurement accuracy is +/- 5 mm. The maximum measurement accuracy is +/- 50 mm.

The red light emitted by the LED/sensor unit is not dangerous to the human eye. Due to the level of brightness, the effect of looking directly at the light may be short-term dazzling.

NOTE

The LED height sensor and reflector are adjusted at the factory. Follow-up adjustments must be performed by the authorised service centre.

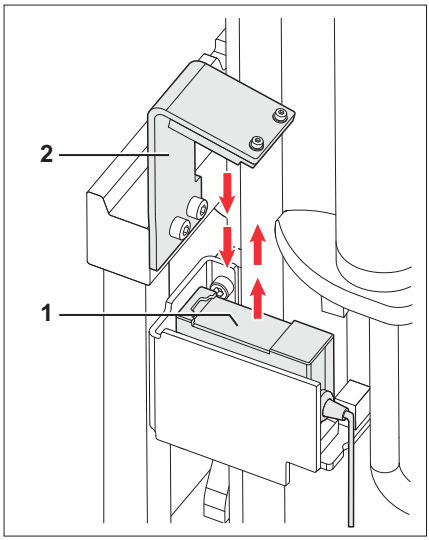

1 LED/sensor unit
2 Reflector

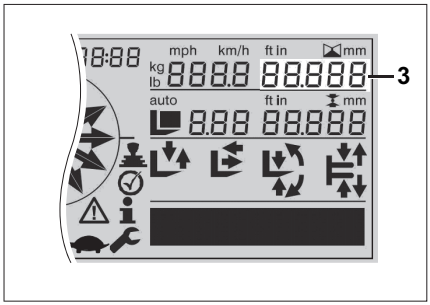

Cleaning the optical height measuring system

If the light signal is too weak, the reflector sensor glass and reflector must be cleaned. The "CLEAN HEIGHT SENSOR" text message appears in the display along with the [i] (1) symbol. To avoid malfunctions, clean the sensor glass and reflector at the latest when the text message is displayed. It is recommended that the sensor glass and the reflector are checked before starting work and as necessary.

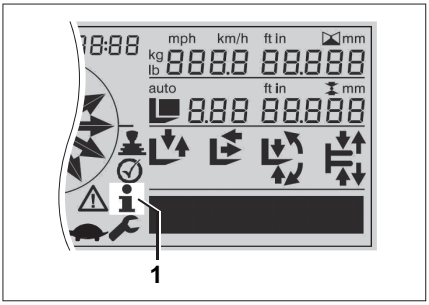

The cleaning frequency depends on the application conditions of the truck. The quality of the light signal may also be reduced as a result of heavy rain or fogging of the sensor.

Text message	Description	Remedy
CLEAN HEIGHT SENSOR	Contamination will affect the measuring signal between the LED height sensor and reflector.	• Clean the sensor glass and reflector. • If the message is still displayed after cleaning, contact your authorised service centre.

⚠ CAUTION

Incorrect cleaning can damage the sensor glass and the reflector.

The components must **never be cleaned using dry materials**.

Do not use agents containing hydrocarbons, e.g. acetone, methanol, ethanol or propane.

⚠ CAUTION

Risk of damage to the LED height sensor through pressure cleaning

A high-pressure cleaner can damage the LED height sensor due to the penetration of water. This can result in incorrect measurements.

– Never direct the spray from a high-pressure cleaner at the LED height sensor.

– Clean the sensor glass of the LED height sensor (1) and reflector (2) with a soft microfibre cloth and water. A small amount of cleaning agent can be added to the water.

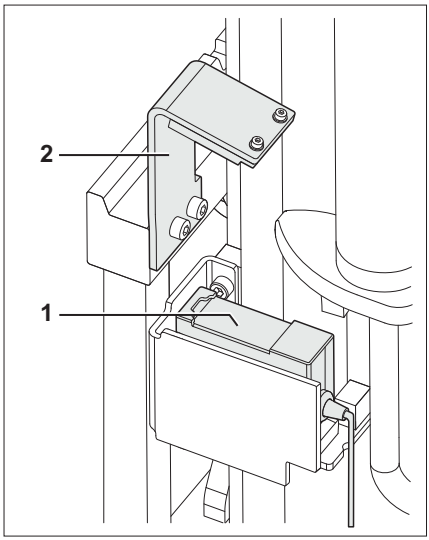

Elimination of malfunctions by the driver

NOTE

A misaligned sensor or bent reflector must be adjusted only by the authorised service centre.

The driver can resolve a temporary interruption of the light signal due to contamination or foreign objects in the signal path. If the malfunction in the system still exists, please contact the authorised service centre.

In the event of a malfunction, an error number is shown in the display. The system is automatically available again as soon as the malfunction is no longer present or has been rectified.

Truck functions that are dependent on the lift height are restricted in the event of a malfunction in the height measurement. The malfunctions must therefore be rectified immediately.

Possible cause	Truck response	Rectifying the error
Error number A3140		
Incorrect measurements caused by a reflective object in the light signal path between the sensor and reflector (foreign signal)	Lifting functions can only be operated in emergency operation. See the following section "Emergency operation in the event of malfunctions in the height measuring system".	• Check the light signal path between the sensor and the reflector. Remove obstacles. Then fully lower the fork to reference the system. • If the error persists, contact the authorised service centre.
Error number A3141		
• Sensor failure, e.g. due to a cable break or internal error	Lifting functions can only be operated in emergency operation. See the following section "Emergency operation in the event of malfunctions in the height measuring system".	Contact your authorised service centre.
Error number A3142		
Sensor overheating	Lifting functions can only be operated in emergency operation. See the following section "Emergency operation in the event of malfunctions in the height measuring system".	• Avoid strong sunlight and proximity to other heat sources. Allow the sensor to cool down. • If the error persists, contact the authorised service centre.
Error number A3143		
• The reflector or sensor is very dirty or fogged up or • Short interruption (min. 2 seconds) in the light signal, for example, through packaging material	Lifting functions can only be operated in emergency operation. See the following section "Emergency operation in the event of malfunctions in the height measuring system". • Error message received after 2 second interruption • Lift height not displayed • Lift height preselector not available	• Clean the sensor glass and the reflector. Observe the information in the section entitled "Cleaning the optical height measuring system". • Check the light signal path between the sensor and the reflector. Remove obstacles. Then fully lower the fork to reference the system. • If the error persists, contact the authorised service centre.

Emergency operation in the event of malfunctions in the height measuring system

In the event of a malfunction in the height measurement, the truck switches to emergency operation.

In emergency operation, features that are dependent on the lift height are not available:

- Lift height display
- Lift height preselector
- Reach/lower lock
- Active load stabilisation (ALS)
- OPTISPEED
- Fork wear protection
- Mast transfer damping

In emergency operation, functions that are dependent on the lift height operate with calculated lift heights rather than measured lift heights due to the missing measured value. For safety reasons, the calculated lift height is always below the actual lift height. This restriction applies to the following functions:

Intermediate lift limitation in emergency operation

- On reaching the calculated intermediate lift limitation, a warning sound signals that there is a malfunction in the height measuring system.

  ► After the joystick or fingertip is moved to the zero position, further lifting can continue at a reduced speed.

  ► If the intermediate lift limitation is cancelled with the acknowledge button, the lifting process can be continued without restriction.

Final lift limitation in emergency operation

- On reaching the calculated final lift limitation, a warning sound signals that there is a malfunction in the height measuring system.

  ► **WARNING:** Once the joystick or fingertip has been moved to the zero position, the lift mast can be moved to the maximum height without limitation.

Height-dependent speed reduction in emergency operation

- The speed reduction activates at a lower lift height than in normal operation.

Load measurement (variant)

NOTE

After changing the load lift system (fork arms, fork extension, attachments), the load measurement system must be calibrated. Only then is a correct load measurement ensured. Calibration must be performed by the authorised service centre.

General

The **"load measurement"** variant helps the driver by displaying the weight of the lifted load on the display and operating unit.

The weight is measured by an additional weight sensor at the valve block. The sensor measures the weight with a deviation of +/-10% of the nominal load of the truck.

The calculated data is also evaluated by assistance systems such as OPTISPEED and Active Load Stabilisation (ALS).

To ensure correct functionality, the load measurement must be performed once for testing purposes as one of the daily commissioning tasks for the truck.

Requirements for load measurement

The load must be in the inactive position so that the weight sensor provides accurate results.

For this reason, load measurement is disabled during the following truck activities:

- Driving
- Lifting
- Lowering

Once the fork has been in the inactive position for two seconds, load measurement is enabled. Load measurement is now possible.

The measured weight of the load is shown on the display and operating unit.

If the button for load measurement is pressed while load measurement is disabled, **" - - - - "** is displayed instead of the measured weight. After a maximum of ten seconds,

the display returns to the speed indicator.
If load measurement is possible within ten seconds because the fork has moved into the inactive position, the measured load weight is displayed.

NOTE

The displayed value of the load measurement is invalid if the fork carriage is positioned exactly between the free lift height and main lift height during the measurement. In this case, the measurement must be repeated at a different position. In addition, the load must be lifted completely off the ground during the measurement.

Performing the load measurement

▷

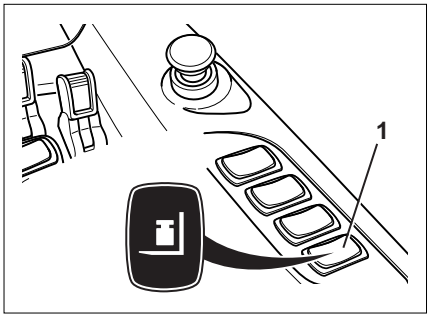

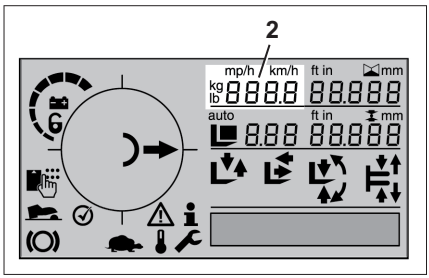

– Slightly lower the fork with the load. This will increase the accuracy of the measurement.
– Press the (1) button to start the load measurement.

The measurement is performed once the load is in the inactive position.

On the display and operating unit (2), the measurement result is now displayed instead of the speed indicator. The displayed value relates only to the completed measurement and is not updated.

After releasing the button, the display switches back to the speed indicator after 2.5 seconds. If the button is pressed for more than two minutes, the display switches back to the speed indicator but message "A3440" also appears.

Speed limitation based on lift height ▷

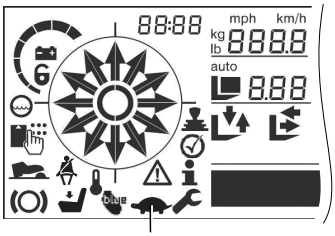

⚠ WARNING

There is always an increased risk of the truck tipping if it is driven with a raised load.

The system is a support for the driver when placing items into stock and removing items from stock. The responsibility for safe operation and complying with safety regulations remains with the driver.

Once a specified lift height has been exceeded, the truck can be accelerated only up to a set maximum speed. If the current driving speed is already above this maximum speed, the truck brakes regeneratively to the set maximum speed. The speed limitation is removed as soon as the current lift height is lowered to below the specified value.

The lift height and the value for the maximum speed can be set by the authorised service centre. The factory setting for the maximum speed is 5 km/h.

While the maximum speed is being limited, the "tortoise" symbol (1) appears on the display and operating unit.

Button for speed limitation, creep speed (variant)

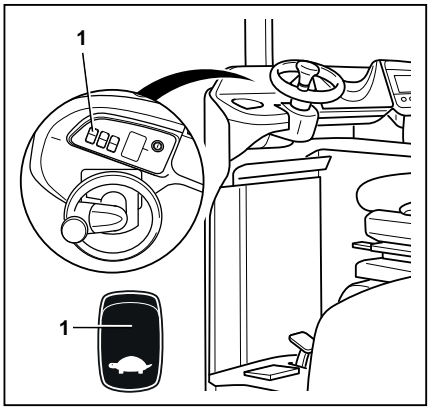

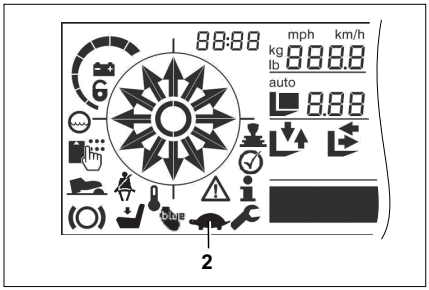

The maximum speed of the truck is temporarily limited by pressing the "speed limitation" button. After pressing the button, the truck can be accelerated only up to the set maximum speed. If the current driving speed is already above this maximum speed, the truck is regeneratively braked to the set maximum speed. The value for the maximum speed can be set by the authorised service centre.

– Press the button (1) to limit the maximum speed to the set value.

The "tortoise" symbol (2) appears on the display and operating unit.

– Press the button (1) again to remove the speed limitation.

The "tortoise" symbol (2) on the display and operating unit disappears.

Camera/monitor system (variant)

⚠ CAUTION

Risk of accident due to collision of the lift mast or load with the racking or low ceilings.

– Also, when using the system, always consider the vibration characteristics of the lift mast and the load.
– Note that the camera image only shows a small part of the surrounding area.

The camera/monitor system helps the driver place loads into stock or remove loads from stock at great lift heights. Using the camera image, loads can be picked from and deposited at high levels without having to look up, thus avoiding neck and shoulder strain.

– Refer to the manufacturer's operating instructions for information about operation of the camera/monitor system.

Electrical adjustment mechanism for the driver's compartment (variant) ▷

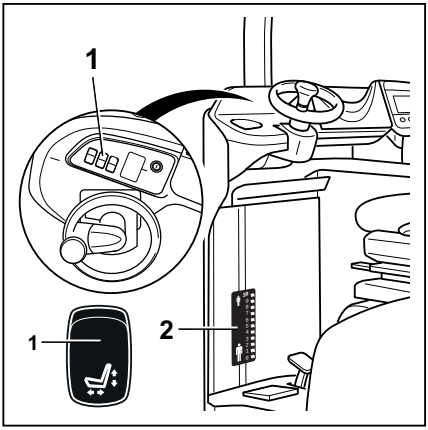

⚠ WARNING

Risk of accident, risk of crushing

The pedal plate and seat console move during adjustment.

- Change settings only when the truck is at a standstill.
- Keep your fingers away from moving parts during adjustment of the driver's compartment. For safety reasons, place your right hand on the joystick. Actuate the rocker switch with your left hand.
- Make sure that there are no objects in the vicinity of the moving parts. Objects could become trapped and damage the mechanism. Only remove trapped objects when adjustment of the driver's compartment has stopped.

⚠ CAUTION

Risk of component damage.

Adjustment of the driver's compartment must only be carried out in the seated position by persons weighing a maximum of 150 kg.

- Observe the total permissible weight during adjustment of the driver's compartment.

NOTE

Before operating the seat-adjustment mechanism, make sure that there is sufficient clearance between the driver's seat and the side wall. This will ensure that the driver's seat is not damaged when it is raised.

The electrical driver's compartment adjustment mechanism, together with the adjustment mechanisms for the seat and for the steering column, is a system that allows the driver's compartment to be adapted as effectively as possible. The position of the driver's seat and the pedal plate are electrically adjusted in proportion to one another.

- Press the rocker switch (1) in the operating panel up or down until the optimum working position is reached.

A scale (2) in the footwell of the driver's compartment gives an indication of the setting to help you remember it.

Overhead guard with optimised visibility (variant)

The overhead guard with optimised visibility features a roof panel made of safety glass. The view of the load is not restricted by struts in the field of vision.

⚠ DANGER

Risk of fatal injury in the event of a damaged roof panel.

In the event of any damage to the roof panel, particularly cracks, the truck must be switched off immediately. The roof panel must then be replaced (safety-relevant component).

Chips on the top of the panel are permissible if all of the following conditions are satisfied:

- The chip is in the area of the screen print around the edge.
- The chip only affects the upper pane panel.
- The chip is no larger than 15 mm.

Roof panel repairs:

⚠ WARNING

A special tool and specialist knowledge is required for this work.

For roof panel repairs, contact the authorised service centre.

– Check the roof panel for damage every day before starting work.

Clipboard (variant)

You have the option of using a clipboard (1) to secure your work papers. This clipboard can be inserted into a slot in the multifunctional panel. To do so, the standard cover of the multifunctional panel must be removed.

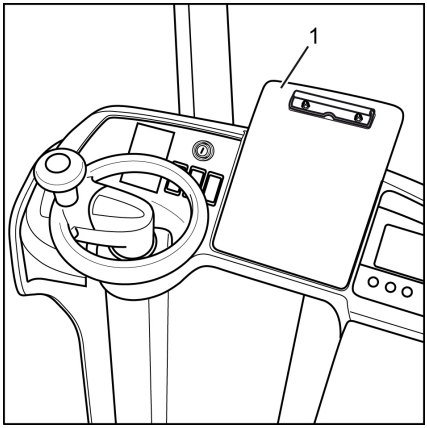

Battery change frame (variant)

General

The battery rack is equipped with two adjacent roller channels.

The battery is pulled out of the truck by hand on to the battery rack and is pushed by hand off the battery rack into the battery compartment of the truck.

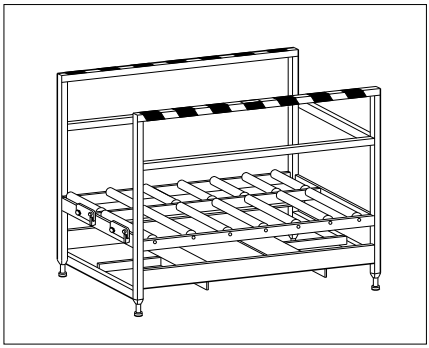

DANGER

Risk of injury

Due to the heavy weights to be moved by hand, the operator is subject to an increased risk of trapping and crushing. Always take particular care when working and observe the safety instructions in the individual chapters.

Safe handling

⚠ WARNING

Risk of physical injury

Battery racks are used for moving heavy weights. Especially for versions with manual drive, there is always the risk of being trapped or crushing hands or fingers. The greatest possible care must therefore be taken to ensure that the battery is against its stop and that when the battery moves along the guides your fingers or hands are not in the way.

So that the forces arising from the moving battery are kept as small as possible, the horizontal position of the truck and battery rack and the transfer height must be matched as accurately as possible. The speed of movement should be kept as low as possible.

The locking mechanisms on the truck and battery rack should always be used.

Under no circumstances should batteries be moved on battery racks not intended for them.

Load capacity

Each battery rack is intended for a particular battery type. This means that the dimensions and the maximum permissible weight are pre-determined. The dimensions and the tray number of the intended battery are to be taken from the order documentation. The maximum load capacity of the battery rack and its net weight are to be taken from the nameplate.

⚠ WARNING

Danger of overloading

For mobile use, it must be ensured that the load bearing capacity of the truck to be used for transportation is sufficient for the weight of the battery and the net weight of the battery rack.

Area of application

Mobile use

The battery rack for the truck is intended for mobile use only. For mobile use, the empty battery rack is moved to the relevant truck. If a double battery rack is available, a freshly

charged battery can also be carried on the second roller channel.

Adjusting the transfer height

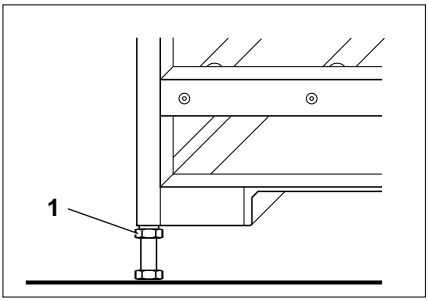

- Use an external spirit level or straight-edge to check the height of the battery rack and that it is level. This is done by matching the upper edge of the roller channel on the battery rack to the roller channel on the truck.
- If necessary, loosen the lock nut (1) on the levelling foot to be adjusted.
- Adjust the levelling foot by turning it clockwise or anti-clockwise. For this purpose, lift the rack slightly to facilitate adjustment.
- Tighten the lock nut.
- On stationary systems, the levelling feet must be bolted to the floor once any adjustments have been made Refer to the information in the original operating instructions from the manufacturer of the change frame.

Locking the battery change frame

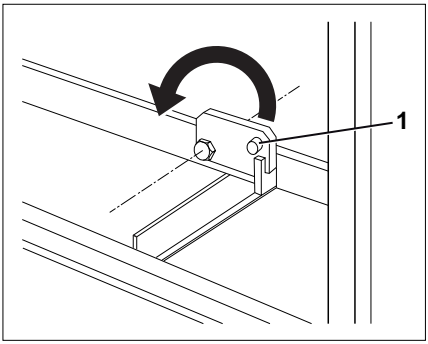

DANGER

Risk of physical injury

Before unlocking the swing bolt, check that the battery rack is on a horizontal surface and that the floor has a sufficient load capacity. This is the only way to ensure that the battery does not move in an uncontrolled manner and trap or crush parts of the operator's body.

When batteries are transported on battery racks, they must be secured with a swing bolt.

Grasp the swing bolt by the projecting knob (1) and swing the bolt to open or close it. To make it easier to release the swing bolt, push the battery back slightly on the roller.

Battery replacement area

Requirements for the battery replacement area

There must be sufficient space to allow the change frames to be positioned and for the truck to be driven through the area.

The battery replacement area must be horizontal, level and have a sufficient load capacity.

There must also be enough space to allow the operator to move safely around the change frames and to operate the change frames.

There must be sufficient room between the truck and the surrounding building or fixed installations so that the operator and passers-by can move around the area safely. This area must be at least 0.5 m wide.

A first aid kit suitable for accidents involving acids must be available. Persons trained in first aid must be available and within calling distance.

Requirements for positioning the change frames

The transfer height of the frame and truck must be aligned with one another; see the chapter entitled "Battery change frame/Adjusting the transfer height"

In order to move the battery in and out easily, the roller channels must be set exactly horizontal. Use a spirit level.

Wear of the truck wheels will change the transfer height. In such instances, change the height setting of the levelling feet.

When the truck and battery rack are positioned relative to each other in accordance with the specifications, the battery replacement can be carried out.

⚠ CAUTION

Risk of damage to property

It depends on conditions on site whether or not an extension cable for connecting the battery to the truck is required during battery replacement. If an extension cable is required, only a cable with an appropriate cross-section and approved plugs must be used.

When an extension cable is in use, the operator must take great care when positioning the truck not to pull the cable out of the socket.

Lift height preselector/easy Target (variant)

General

The lift height preselector supports the user when placing loads into stock/removing loads from stock. There are 160 programmable levels grouped into eight areas (A-H), each with 20 levels. After selecting one of these levels, the user can read the following in the display:

- Selected target level and area (1)
- Actual height (2)
- Target height or distance to target (with pallet free lift included in the calculation) (3)

NOTE

The fork arms must be in the "0° position" to ensure their height position is calculated correctly. The "Automatic tilt to centre position" option is very useful for this!

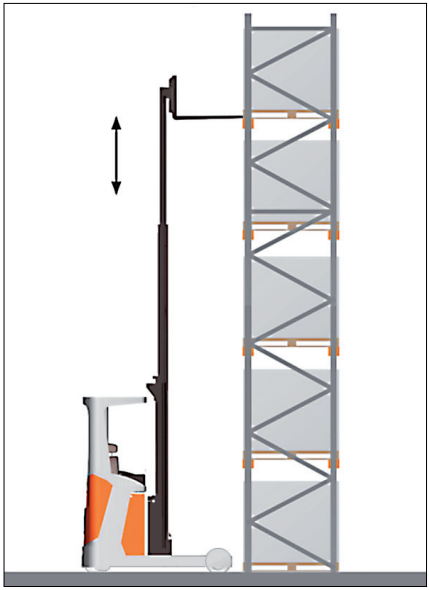

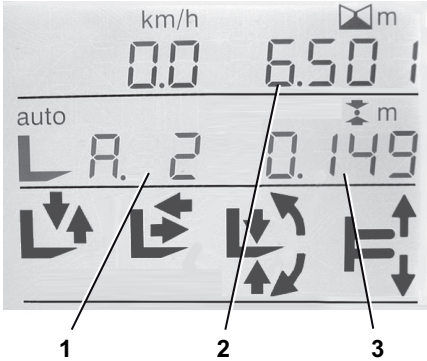

Definition of terms

Level

One target height can be assigned to each level. Valid levels can be reached semi-automatically.

Area

A warehouse can be divided into eight areas and each area can contain up to 20 levels.

Placing into stock

Placing into stock (3) is the insertion of a pallet into the rack.

Removing from stock

Removing from stock (4) is the removal of a pallet from the rack.

Assistant

The display includes an assistant (5) that shows the possible movements via symbols and corresponding direction arrows. During automatic operation, the display shows only the direction arrows for function symbols that are currently allowed.

The individual symbols mean:

- Main lift lowering/lifting (6)
- Shift to drive side/load side (7)
- Tilt to drive side/load side (8)
- Transition shift left/right (9)

Pallet free lift

The pallet free lift (10) is the difference in height by which the load support is raised or lowered after shifting in order to place a load into stock or remove a load from stock. This value can be individually adjusted for placing into and removing from stock at each level by using the service software. The default setting is 150 mm.

Reference drive

The process of passing the reference switch located on the upper part of the lift mast is known as referencing. This process sets the reference value for the height position.

▷

1	2							
	A	B	C	D	E	F	G	H
20								
19								
⋮								
⋮								
2								
1								

img61200770211m1

1 Level 1-20
2 Area A-H

img61200770212m1

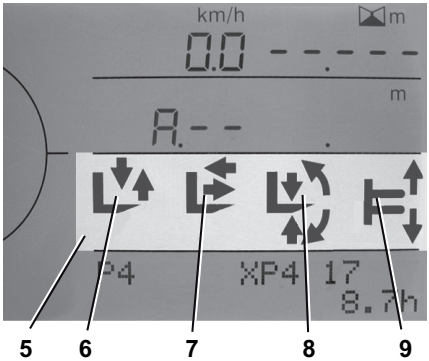

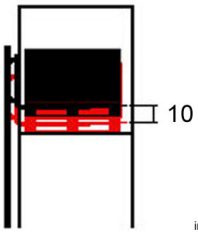

img61200770214m1

If the load support is not in free lift, a reference drive is required. In this process, the load support is lowered until it is below the reference switch, then raised again.

Reference height

The reference height is the distance from the upper edge of the load support to the floor when the reference switch is tripped. The reference height differs according to the lift mast height and can be set using the service software.

The set value also determines which basic height is shown in the display if the free lift has ended and the main lift is beginning.

AUTO MODE function

For height preselection, there are four configurations available for selection in the service software. The configuration can only be changed by the authorised service centre.

"Truck options 1" page:

- AUTO MODE height preselection **"Basic position"**
- AUTO MODE height preselection **"Any position"**
- AUTO MODE height preselection **"Without fork cycle"**
- AUTO MODE height preselection **"Start only with fork below target height"**

AUTO MODE height preselection "Basic position"

In the "Basic position" configuration, the assistant also specifies, in addition to the height preselection, the respective position of the reach carriage.

Once the area and level have been entered, the place into/remove from stock function must be selected to activate height preselection.

- If the reach carriage is not in the basic position, the assistant specifies "retract

reach carriage" until the basic position is reached.

- If the basic position is reached, only lifting and/or lowering is enabled and is specified by the assistant accordingly. The lifting or lowering procedure stops automatically at the target point. If the target point is reached, then shifting, tilting and transition shifting are enabled.
- The assistant now specifies "extend reach carriage". As soon as the reach carriage is extended to the target point, lifting or lowering is enabled. Depending on the function selected at the start (place into/remove from stock), the assistant specifies the pallet free lift height and/or free lowering height.
- Once this process is complete, the assistant specifies "retract reach carriage" until the basic position is reached.
- When the basic position has been reached, the truck switches back to manual operation.

AUTO MODE height preselection "Any position"

In the "Any position" configuration, the assistant specifies the height preselection without taking the respective position of the reach carriage into account.

Once the area and level have been entered, the place into/remove from stock function must be selected to activate height preselection.

- Regardless of the position of the reach carriage, only lifting or lowering is enabled and is specified by the assistant accordingly. The lifting or lowering procedure stops automatically at the target point. If the target point is reached, then shifting, tilting and transition shifting are enabled.
- Lifting or lowering is now enabled regardless of the position of the reach carriage. Depending on the function selected at the start (place into/remove from stock), the

assistant specifies the pallet free lift height and/or free lowering height.

- Once this process is complete, the truck switches back to manual operation.

AUTO MODE height preselection "Without fork cycle" and "Start only with fork below target height"

In the two modes "Basic position" and "Any position", an additional selection can be made between the options "Without fork cycle" and "Start only with fork below target height". The selection specifies whether the target height can be reached directly, or whether the fork carriage must first be lowered to a height lower than the target height.

AUTOMODE height preselection "Without fork cycle"

- The target height can be reached directly, regardless of whether the fork carriage is higher or lower than the target height. The height preselector immediately specifies direct lifting or lowering to the target height. After reaching the target height, height preselection is complete.

AUTOMODE height preselection "Start only with fork below target height"

- The target height can be reached directly only if the fork carriage is lower than the target height.
- If the fork carriage is above the target height, the lift height preselector first specifies lowering until the fork carriage is lower than the target height. The lift height preselector will then specify lifting to the target height.

Operating the lift height preselector

General

WARNING

If the load support is tilted there is a risk of collision with the pallet or racking!

The load support must always be in the "0° position" during placement into stock/removal from stock operations!

NOTE

If height preselection is active, only the arrow symbols for movements that are still possible will light up on the function symbols in the assistant (1). The required movement is identified in each case by a corresponding flashing arrow symbol. Function symbols without arrow symbols mean that the function is blocked. If the load support is above the free lift height, a reference drive must be performed after switching on to activate the height display.

The **initial position** for this description is a retracted reach carriage (shifting measurement system reports DS end position) and a lift mast in free lift. Other combinations are also possible. However, they lead to different displays on the assistant (1). The assistant specifies the function that must be carried out. The following description is intended as an example.

When the truck has been switched ON, area "A" (2) is automatically selected. The area can be changed by pressing the button (3). If "H" is reached, "A" is repeated. This enables area preselection. A level can be selected (1-20) by entering a digit using the alphanumeric keypad (4). The complete selection (level and area) is shown in the display (5). The stored target height is displayed under (6).

NOTE

During free lift, the difference between the reference height and the target height is shown on the display as the "lift height remaining until target (target difference)" (6). The display does not show the difference between the current lift height and target height until after the

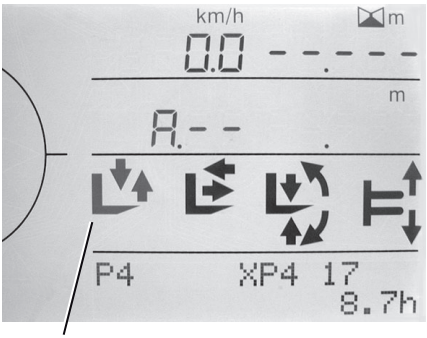

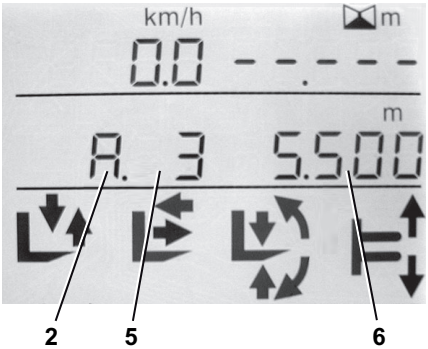

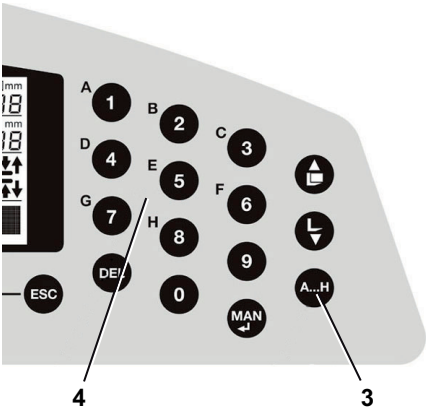

reference switch has been passed. The selection (level and area) can be cancelled using the "DEL" button.

Example: Placing into stock in fully automatic mode

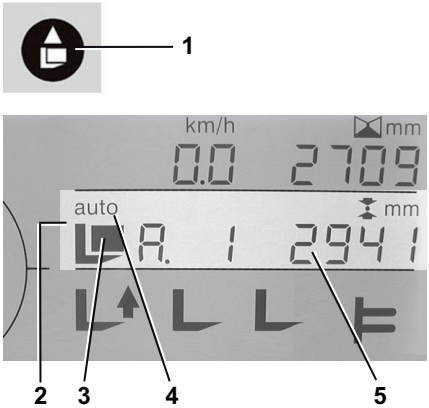

NOTE

Placing into stock can only be selected if valid heights were assigned to the levels during the teach-in process. Levels that are invalid or that have not had a height assigned to them are not activated in automatic mode. All programmable heights are set at the factory to "5500 mm". Automatic mode can be interrupted at any time using the "MAN" button!

– After entering the target level (e.g. A1), press the button for placing into stock (1). The symbol for placing into stock (3) and "auto" for automatic operation (4) appear in the assistant (2). The display (5) changes from the target height to the distance to the target (target difference).

CAUTION

If the placing into stock button (1) is not pressed, all hydraulic functions are available without restriction (= manual operation)!

Pay attention to the symbols in the display!

– After entering the target level (e.g. A1), press the button for placing into stock (1). The symbol for placing into stock (3) and "auto" for automatic operation (4) appear in the assistant (2). The display (5) changes from the target height to the distance to the target (target difference).

- Activate the lift function (displayed by the assistant). The selected height plus the pallet free lift height is reached and the automatic stop is performed (6). The display (5) shows a distance to the target ≤ 6 mm.
- Drive up to the racking (7).
- Activate the LS shifting function (shown by the assistant) and push the pallet onto the shelf (8).
- Activate the lowering function (shown by the assistant). The forks are lowered by the pallet free lift (9) height.
- Activate the DS shifting function and retract the reach carriage completely (shown by the assistant) (10).

The automatic routine is complete. All functions are available again (= manual operation).

- Back the truck away (11).

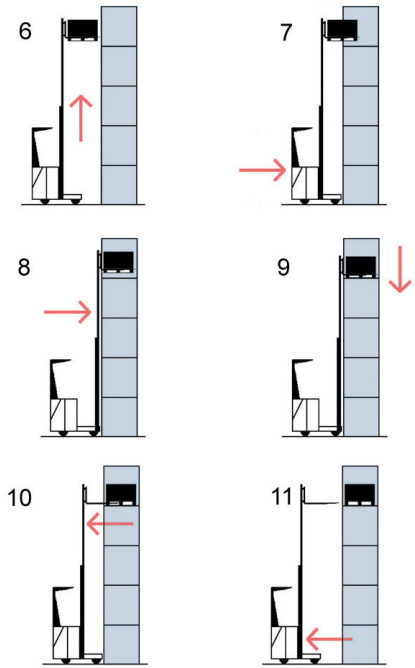

Example: Removing from stock in fully automatic mode

NOTE

Removing from stock can only be selected if valid heights were assigned to the levels during the teach-in process. Levels that are invalid or that have not had a height assigned to them are not activated in automatic mode. All programmable heights are set at the factory to "5500 mm". Automatic mode can be interrupted at any time using the "MAN" button!

- After entering the target level (e.g. A2), press the button for removing from stock (1). The symbol for removing from stock (3) and "auto" for automatic operation (4) appear in the assistant (2). The display

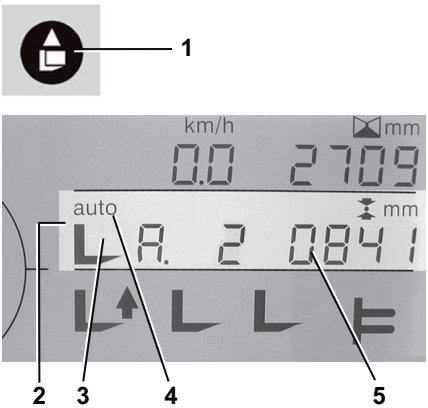

(5) changes from the target height to the distance to the target (target difference).

⚠ CAUTION

If the removing from stock button (1) is not pressed, all hydraulic functions are available without restriction (= manual operation)!

Pay attention to the symbols in the display!

- Activate the lift function (displayed by the assistant). The exact selected height is reached and the automatic stop is performed (6). The display (5) shows a distance to the target ≤ 6 mm.
- Drive up to the racking (7).
- Activate the LS shifting function (shown on the assistant) and insert the fork arms all the way into the pallet (8).
- Activate the lift function (displayed by the assistant). The forks are raised by the pallet free lift height; the load is picked up (9).
- Activate the DS shifting function and retract the reach carriage completely (shown by the assistant) (10).
- Back the truck away (11).

The automatic routine is complete. All functions are available again (= manual operation).

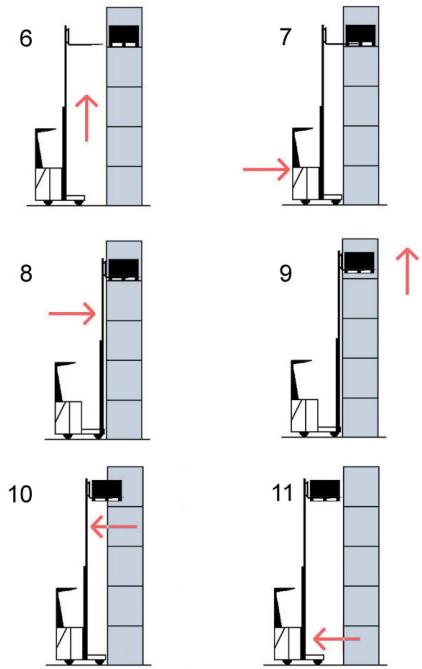

Teach-in, general

The teach-in for height preselection is carried out using the truck display.

In order to carry out the teach-in, the user must be logged in to the truck with a PIN code with authorisation level "2" or "3".

NOTE

Before a new height can be set via the display, a reference drive must be carried out. Heights that are below the reference height can be saved by entering them manually. However, if such a level is selected, automatic operation cannot be used.

Only preset heights can be changed via the display. No other truck-specific height preselection parameters can be changed. This can only be done using the service software.

The following parameters, among others, can be changed using the service software:

- Pallet free lift height
- Pallet free lowering height
- Accuracy and speed of pallet free lift and pallet free lowering
- Accuracy and speed of homing

Performing a teach-in

The teach-in for height preselection is carried out using the display and the enter keys for the display and operating unit.

The values for the programmable lift heights must be entered via the enter keys on the numeric keypad. It is not possible to move the fork to a lift height and transfer this value to the height preselection system.

Opening the lift height preselector menu

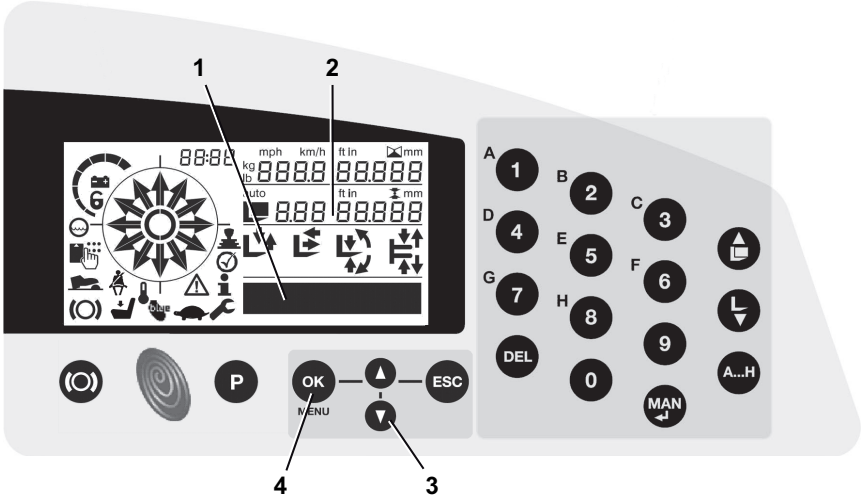

– For information on the general operation of the truck configuration, as well as entering a password with a specific authorisation level, see the chapter entitled "Onboard truck configuration/General".

– Press the "ESC" (4) and "OK" (6) buttons for three seconds. The following appears on the display field (1):

PASSWORD _ _ _ _

– Using the enter keys (3), enter a password for authorisation level "2" or "3".

– Confirm the entry with the "OK" button. The selection menu appears in the display field (1).

– Press the arrow keys (5) until ADJUST appears in the display field.

– Press the "OK" button. The height currently saved on the system for the first "area" and the lowest "level" is displayed in the display field (2).

Entering and saving lift heights for height preselection ▷

The programmable lift heights are entered using the enter keys on the control panel. The result of each entry is displayed in the display field (1).

To ensure saved lift heights can be selected at a later stage, three items of information must be entered for each lift height:

- A defined (storage) area (A-H) (2)
- A defined (racking) level (1-20) (3)
- The programmed lift height in millimetres (4)

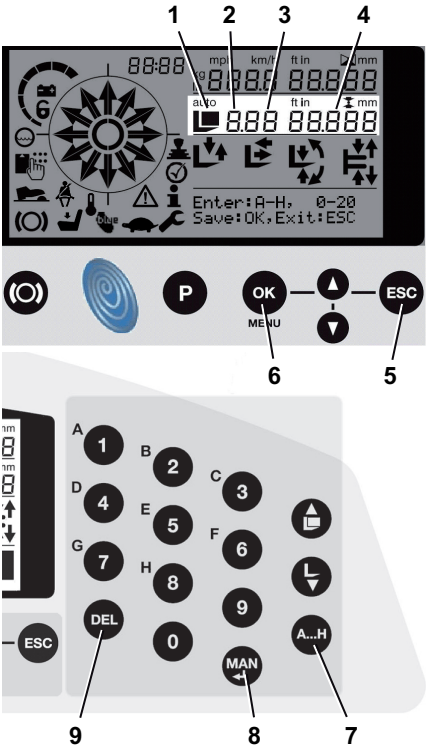

NOTE

Press the "ESC" button (5)to end the input and quit the menu item without saving. Press the "DEL "button (9) to delete the input.

Programming the lift height (example: area A, level 07, lift height 5500 mm)		
Button	**Action**	**Display**
Enter the area		
"A-H" button (7)	Press	_ _ _ _ _ _ _ _
Enter the level		
A (0)	Press	A _ _ _ _ _ _ _
0	Press	A0 _ _ _ _ _ _
7	Press	A07 XXXXX (the stored value is displayed)
"MAN " button (8)	Press	A07 **(X flashes)** XXXX
0	Press, the flashing digit is replaced	A07 0 **(X flashes)** XXX --> the cursor advances one place

Programming the lift height (example: area A, level 07, lift height 5500 mm)		
Button	**Action**	**Display**
5	Press, the flashing digit is replaced	A07 05 **(X flashes)** XX --> the cursor advances one place
5	Press, the flashing digit is replaced	A07 055 **(X flashes)** X --> the cursor advances one place
0	Press, the flashing digit is replaced	A07 0550 **(X flashes)** X --> the cursor advances one place
0	Press, the flashing digit is replaced	A07 0550 **(X flashes)** --> cursor remains in the last position
"OK" button (6)	Press	Input complete; the value you have entered is displayed

easy Target/easy Target Plus (variants)

▷

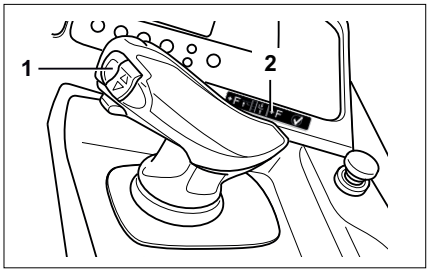

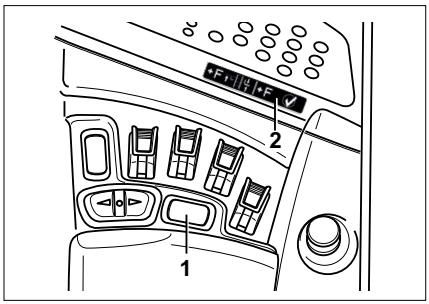

The `easy Target` and `easy Target Plus` functions make operating the lift height preselector straightforward and intuitive. The lift height preselector and the "Automatic tilt to centre position" function are simply controlled using the F button (1) on the joystick or on the fingertip console. The adhesive label (2) shows the functions that can be carried out with `easy Target` or `easy Target Plus`.

`easy Target` and `easy Target Plus` are additional comfort functions for the lift height preselector. The general functionality, setup and operation of the lift height preselector are described in the standard operating instructions for the truck; refer to the chapter entitled "Lift height preselector".

On trucks with a toothed belt for lift height measurement, `easy Target` and `easy Target Plus` function only during the main lift because lift height measurement is not active during the free lift.

On trucks with optical lift height measurement, `easy Target` and `easy Target Plus` function across the entire fork lift height, from ground level up to the maximum lift height of the truck.

Trucks with easy Target and easy Target Plus are distinguished by the additional decal information on the operating device.

easy Target (variant)

easy Target simplifies the approach to a required target height with the lift height preselector. Instead of entering the target height in the input field using the buttons, the height is selected using the F button on the joystick or on the fingertip console. There is no longer any need to remove your hand from the joystick or from the fingertip console.

The easy Target function is activated by pressing the F button when lifting or lowering the fork. For the entire time that the F button is pressed, the display continuously shows the next attainable target height. If a target height has been passed, the next target height is automatically displayed. When the required target height appears in the display, this height is selected by releasing the F button. The fork stops at the selected lift height.

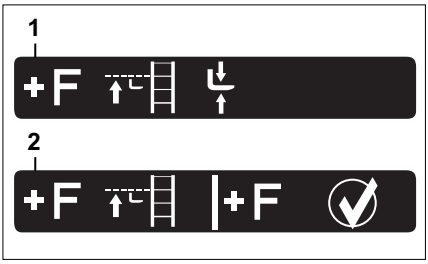

Decal information: "easy Target"

1 easy Target
2 easy Target (can also be operated with the acknowledge button)

NOTE

As an alternative to using "easy Target", the target heights for the lift height preselector can also be entered using the buttons for the input field.

easy Target Plus (variant)

In conjunction with easy Target, easy Target Plus makes it easier to perform the "Automatic tilt to centre position" function. This function moves the fork into the horizontal position when placing into stock and removing from stock.

With easy Target Plus, the function is not activated using the "Automatic tilt to centre position" button, but instead using the F button (1) on the joystick or on the fingertip console. There is no longer any need to remove your hand from the joystick or from the fingertip console.

First, a target height for the lift height preselector is selected and reached using the easy

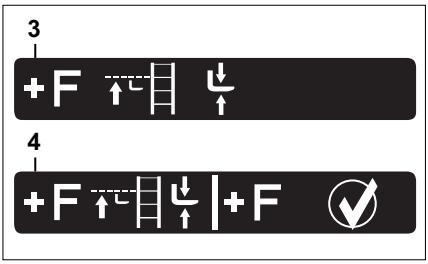

Decal information: "easy Target Plus"

3 easy Target Plus
4 easy Target Plus (can also be operated with the acknowledge button)

`Target` function. Once the selected target height has been reached, `easy Target Plus` is activated by pressing the F button again. For the entire time that the F button is pressed, the "Automatic tilt to centre position" function is executed. If the fork is positioned horizontally, the F button can be released.

After setting down the load on the racking, `easy Target Plus` is re-activated by pressing the F button again. For the entire time that the F button is pressed, the "Automatic tilt to centre position" function is executed. If the fork is positioned horizontally, the F button can be released.

NOTE

As an alternative to using "easy Target Plus", the function can also be executed using the "Automatic tilt to centre position" button.

Prerequisites for use

To use the `easy Target` function, the "Lift height preselector" option must be set up and operational on the truck. The target heights that need to be controlled using the easy Target function must already be stored in the lift height preselector.

To use the `easy Target Plus` function, the "Automatic tilt to centre position" option must also be set up and operational on the lift mast.

Approaching target heights using "easy Target"

NOTE

If "easy Target" issues a short warning sound when used, the fork must first be lifted once using the main lift function so that the lift height measurement is referenced.

▷

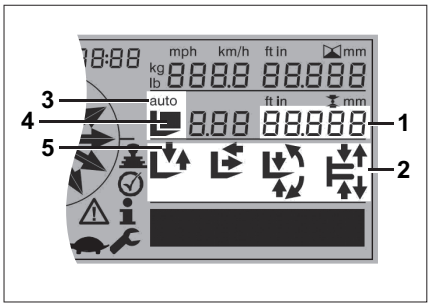

Operation	Result	Display
Switch on the lift height preselector (push button **A..H** in the input field)	The lift height preselector is switched on.	The assistant for the lift height preselector (2) is displayed.
Lift or lower the fork using the joystick or fingertip console.	The lifting or lowering procedure starts.	The display (1) shows the target height currently set in the lift height preselector.
When lifting or lowering, press and hold the F button.	easy Target is activated. The lift height preselector detects whether there is a load on the fork and indicates the placing into stock or removing from stock procedure accordingly.	The display (1) changes to the next **attainable** target height. The symbol (4) for the placing into stock or removing from stock procedure is displayed.
If the required target height is displayed, release the F button.	The new target height is selected.	The AUTO symbol (3) is displayed. The assistance arrows (5) indicate "lifting" or "lowering".
Continue to lift or lower until the target height is reached.	The process stops automatically at the required target height. easy Target is complete.	The assistance arrows for "lifting" or "lowering" are no longer displayed.
If applicable, continue to follow the assistance arrows from the lift height preselector until the placing into stock/removing from stock procedure is complete.	The placing into stock/removing from stock procedure is complete.	The assistant for the lift height preselector (2) indicates the next steps until the placing into stock/removing from stock procedure is complete.
Cancel easy Target: Press the **MAN** button in the input field or release the foot switch (dead man's switch).		

Positioning the fork horizontally using "easy Target Plus"

easy Target Plus can be executed when the lift height preselector is active. The operating steps for easy Target Plus are highlighted in grey in the table.

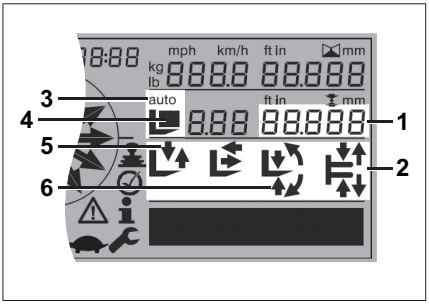

Operation	Result	Display
Execute `easy Target Plus` (before driving the fork into the racking):		
Move the joystick or the fingertip console to the inactive position. Only then press and hold the F button again.	`easy Target Plus` is activated. The fork is positioned horizontally.	One of the two assistance arrows (6) is visible, indicating that the fork is positioned horizontally.
Once the fork is positioned horizontally, release the F button.	`easy Target Plus` is complete.	Both assistance arrows (6) are visible. The fork is positioned horizontally.
If applicable, continue to follow the assistance arrows from the lift height preselector until the placing into stock/removing from stock procedure is complete.	The placing into stock/removing from stock procedure is complete.	The assistant for the lift height preselector (2) indicates the next steps until the placing into stock/removing from stock procedure is complete.
Execute `easy Target Plus` (after driving the fork out of the racking):		
Move the joystick or the fingertip console to the inactive position. Only then press and hold the F button again.	`easy Target Plus` is activated. The fork is positioned horizontally.	One of the two assistance arrows (6) is visible, indicating that the fork is positioned horizontally.
Once the fork is positioned horizontally, release the F button.	`easy Target Plus` is complete.	Both assistance arrows (6) are visible. The fork is positioned horizontally.
Cancel `easy Target Plus`: Press the **MAN** button in the input field or release the foot switch (dead man's switch).		

Cab (variant)

General information about the cab

Depending on the area of application, the truck can be equipped with a weather protection cab or a cold store cab.

Operating devices (variants)

The operating devices for the hydraulic functions and driving are positioned and operated in the same way as those on the basic truck.

Possible equipment variants include:

- Screen heating
- Washer system
- Heating system
- Fan heater
- Intercom system
- Working spotlight
- Interior lighting

Opening the cab door

⚠ DANGER

Risk of fatal injury as a result of driving with the cab door open!

The driver can be injured if he does not keep his entire body within the protective cab, or if he falls off the truck.

– Always close the cab door before driving off, and keep it closed when driving.

Opening the cabin door from the outside

– Insert the key in the door lock (1), unlock and remove the key.

– Pull the door handle (2) and release the door lock.

– Open the cab door by pulling it outwards.

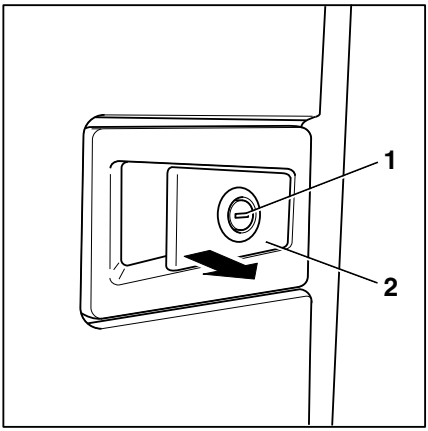

NOTE

There is no monitoring switch for the cab door. To operate the truck functions, actuate the foot switch, as in the basic truck.

Opening the cabin door from the inside

– Grip the handle, push the locking knob (3) and push the cab door outwards. ▷

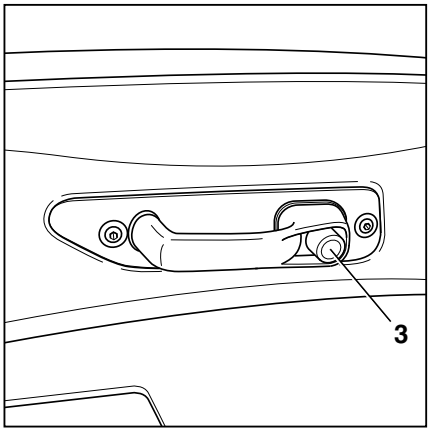

Closing the cab door

⚠ DANGER

Risk of fatal injury as a result of driving with the cab door open!

The driver can be injured if he does not keep his entire body within the protective cab, or if he falls off the truck.

– Always close the cab door before driving off, and keep it closed when driving.

⚠ DANGER

There is a risk of damage caused by collision if the cab door opens while driving.

– The cab door must be latched securely in the engaged position.

– Close the door firmly.

The door must engage in the lock and the rubber seals must line up correctly.

Cab operating devices

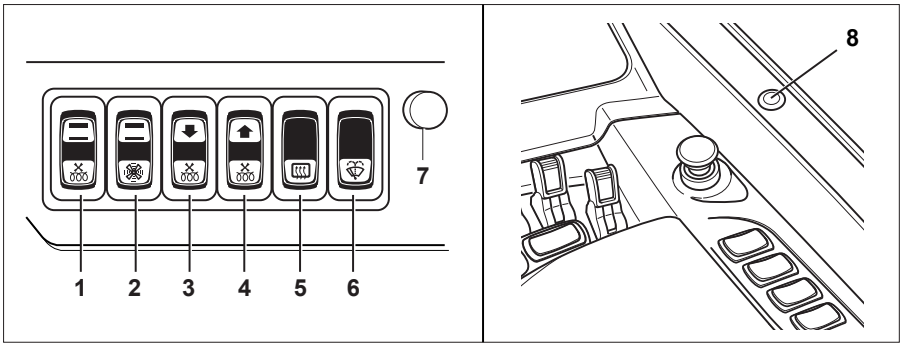

WARNING

Risk of accident from actuating the operating devices in the cab while the truck is in motion.

If the driver briefly stands up from the driver's seat in order actuate operating devices, the driver may be injured due to an insecure grip or may lose control of the truck.

– Only actuate the operating devices in the cab when the truck is stationary

No.	Operating device	Function
1	Heating system rocker switch (door), 2-stage	Selection of two heating levels for the warm air heating system in the door
2	Ventilation fan rocker switch, 2-stage	Selection of two blower speeds
3	Heating system rocker switch (footwell), 2-stage	Selection of two heating levels for the warm air heating system under the steering wheel
4	Heating system rocker switch (head area), 2-stage	Selection of two heating levels for the warm air heating system in the overhead guard post
5	Screen heating rocker switch, tap mode	Tapping the rocker switch starts the heating phase, which switches off automatically after a few minutes
6	Intercom system rocker switch	Activates the intercom system
7	Intercom system volume controller	Controls the volume of the intercom system
8	Intercom button	While speaking, the operator must keep the intercom button pressed down

The operator switches on the function by pressing the upper half of the relevant rocker switch. Pressing the lower half of the switch switches off the function in question. There

may, however, be a slight delay between the switch being pressed and the function being switched off.

Cab interior lighting (variant)

For better illumination of the cab, the truck can be equipped with a pivoting interior light.

– Press switch (1) to switch on the cab light.

– Adjust the reflector until the working area is optimally illuminated.

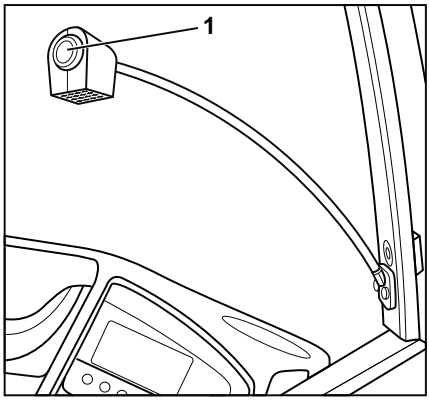

Heating system in the cab (variant)

Switching on the blower and heating system

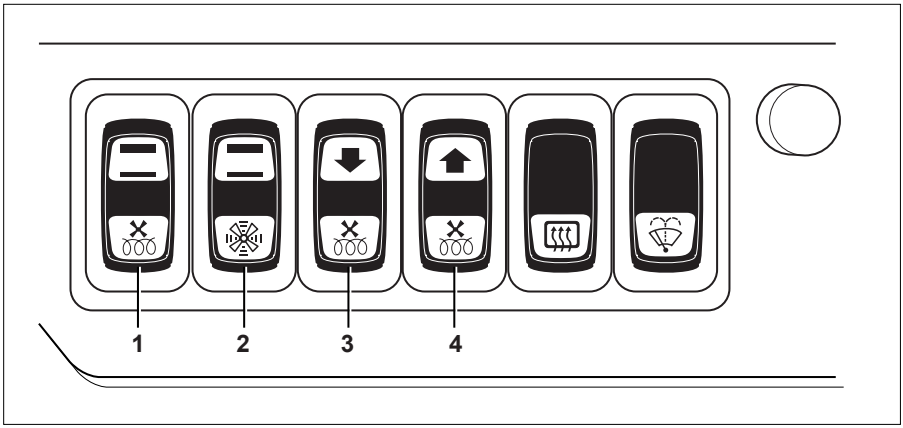

1	Rocker switch for heating system (door), 2-stage
2	Rocker switch for ventilation fan, 2-stage
3	Rocker switch for heating system (footwell), 2-stage
4	Rocker switch for heating system (head area), 2-stage

DANGER

There is a risk of poisoning if heavily polluted surrounding air is aspirated into the closed cab!

The heater must not be operated in the vicinity of storage areas or the like, in which fuel vapours or fine dust (e.g. coal, wood or grain dust) can build up.

DANGER

There is a risk of explosion due to gases expanding or igniting as a result of heat.

– Do not expose spray cans or gas cartridges to the flow of hot air.

DANGER

The heating system overheats if the hot air cannot escape from it. There is a risk of fire!

The heating system may only be switched on if the blower is running and the heating system is not covered by objects (such as a jacket or cover).

– Always switch the blower on first.
– Do not switch the heating system on until the blower is switched on.
– Move any objects away from the heating system or air outlets.

DANGER

The heating system housing can become very hot when the heating system is operating. There is a risk of burns if it is touched!

– Do not touch the heating system housing during operation.
– Only touch the switches provided.

– Switch on the required heating function by actuating the relevant rocker switch.

No.	Operating device	Function
1	Rocker switch for heating system (door), 2-stage	Selection of two heating levels for the warm-air heating system in the door
2	Rocker switch for ventilation fan, 2-stage	Selection of two blower speeds

No.	Operating device	Function
3	Rocker switch for heating system (footwell), 2-stage	Selection of two heating levels for the warm-air heating system under the steering wheel
4	Rocker switch for heating system (head area), 2-stage	Selection of two heating levels for the warm-air heating system in the post on the overhead guard

Switching off the heating system and blower

DANGER

The heating system overheats if the hot air cannot escape from it. There is a risk of fire!

The blower may only be turned off if the heating system is turned off.

- Always turn the heating system off first.
- Only turn the blower off when the heating system is switched off.

- Switch off the required heating function by actuating the relevant rocker switch. For information about the functions of the rocker switches, refer to the chapter entitled "Switching on the blower and heating system".

Changing fuses

DANGER

Using the wrong fuses can result in short circuits. There is a risk of fire!

- To change the fuses, contact the authorised service centre.

Emergency exit window in the cab

⚠ CAUTION

The emergency exit window is only intended for leaving the truck in the event of an emergency. There is a risk of damage caused by collision if the truck is driven with the window open or if the window opens while driving.

Do not drive with the emergency exit window open.

If the window has been opened, make sure that the window is latched securely in the engaged position before driving off again.

The window behind the driver's seat is used to rescue the driver if he or she is shut inside the cab in a hazardous situation, for example if the truck has toppled over and the cab door can no longer be opened. It is labelled EMERGENCY EXIT ONLY.

- Switch off the truck.
- To make it easier to climb out, fold down the driver's seat backrest.
- Pull both locking knobs (1) upwards until the window (2) can be opened outwards. ▷
- Ensure that the surrounding area is safe, push the window outwards and climb out of the truck to the side.
- Make sure that the window is latched securely in the engaged position before driving off again.

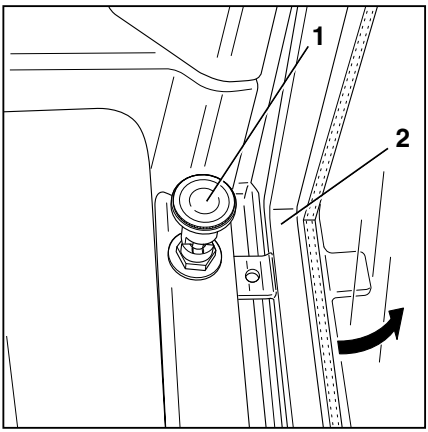

Cold store application

General

In order to make industrial trucks suitable for use in cold stores, the trucks must be fitted with auxiliary equipment and subjected to technical modifications. As a result of this

change in setup, the operational behaviour, maintenance intervals and maintenance tasks differ to those for standard industrial trucks.

The following section describes the steps that must be taken to ensure your cold store truck retains its functionality in cold-store conditions over a long period of time.

Areas of application

Distinction is drawn between 4 different areas of application, and between various different modes of operation within these areas:

Area of application	Cold store equipment	Temperature range up to	Operating time	Comment
1	Not required	-10°C	Brief	Typical application for trucks that take the load from the cooling truck into the cold store, where the load is handled by storage and retrieval trucks.
2	Required	-30°C	Continuous	Alternating between indoor and outdoor use: time spent outdoors long enough for the condensation to drain off at least (generally min. 30 minutes) or short enough so that no condensation can form (generally max. 10 minutes). Parking outside of the cold area.

Area of application	Cold store equipment	Temperature range up to	Operating time	Comment
3	Required	-30°C	Continuous	Truck is parked outside of the cold store area only for maintenance or repair work or only for max. 10 minutes.
4	Required	-45°C	Brief	Cold store equipment is only designed for continuous use at temperatures down to -30°C.

Description of the cold store equipment

Cold store equipment components

⚠ CAUTION

Only trucks with Vulkollan wheels may be used in cold stores.

– Check Vulkollan wheels before starting to drive.

The cold store equipment for industrial trucks consists essentially of:

- Oil types suitable for the cold store, for use in the hydraulics and gearbox.
- Lubricants suitable for the cold store, for use on moving parts, such as gearing and chains.
- Chains treated with water-repellent low-temperature grease are fitted.
- The paintwork on the trucks is designed for use at freezing temperatures.
- Heating fans and heating resistors are positioned throughout the industrial truck in order to keep the most important components at operating temperature.
- Precautions are taken to allow any condensation water to drain off without it getting into the electrics.
- The lift cylinders and other hydraulic parts are fitted with special seals where required.

Battery in the cold store

The drive batteries of the industrial trucks may under no circumstances reach the temperature of the cold store (-30°C) or shock cold store (-45°C). They must either be in operation or charging. The batteries must not remain in the cold store overnight without power drain or charging. It is best to charge the battery outside the cold store and to continue to operate the industrial truck in the cold store with replacement batteries. The battery charger must always be operated outside the cold store.

⚠ CAUTION

Depending on the temperature, the charging time of the battery may increase and the available capacity of the battery may be reduced.

The lower the temperature at which the battery is used, the longer the charging time and the lower the available capacity. The standard capacity is reached at 30°C. If the temperature is reduced by 1°C, this capacity is reduced by approximately 1%.

Impermissible use of the lithium-ion battery in the shock cold store (-45°C)

⚠ CAUTION

Risk of component damage.

The lithium-ion battery is not approved for use in shock cold stores (-45°C).

– Do not drive into a shock cold store with the lithium-ion battery (even for a short period).

The "Areas of application" chapter defines four areas of application for cold store applications. The lithium-ion battery is only permitted to be used in application areas "1" to "3". The lithium-ion battery is not approved for application area "4" (shock cold stores, down to -45°C).

Before entering the cold store

Warming up the truck

Before normal operation in the cold store, the truck must be warmed up for approx. 5 minutes. To do this, all traction and lifting actions must be carried out several times. The warm-up phase is necessary in order to raise the oil temperature. Proportional valves and seals will only work perfectly after this warm-up phase has been completed.

Checking the brake system

– The operational safety of the brake system must be checked by actuating the brake several times during the warm-up phase.

Alternating between the normal area and the cold-store area

Before entering the cold store, any condensation water on the truck must be dried off.

NOTE

In exceptional cases, the truck may also be driven into the cold store with a small amount of condensation. When doing so, prevent the condensation water on the truck from freezing. Water droplets on the sensor system and on the mechanical components must be removed by actuating the lift mast.

- *Before entering the cold store, fully raise the lift mast once and lower it again*
- *Repeat the operation after entering the cold store*

Procedure in emergencies

Emergency shutdown

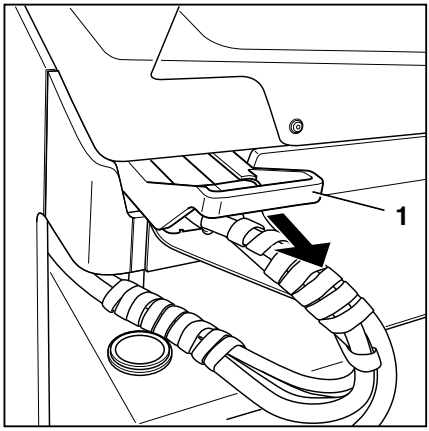

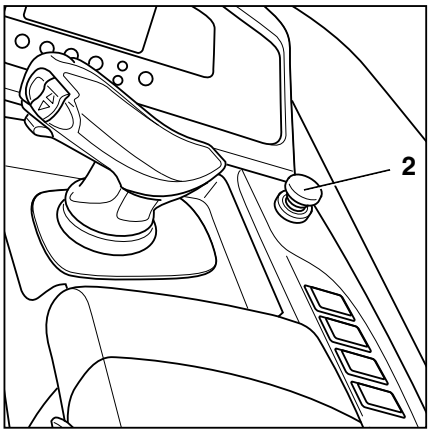

⚠ CAUTION

If the battery male connector (1) is disconnected or the emergency off switch (2) is actuated, the truck's electrical functions are switched off.

This safety system must only be used in an emergency or to safely park the truck.

⚠ CAUTION

Risk of component damage!

If you remove the battery male connector when the key switch is switched on (under load), an arc will be produced. This can lead to erosion at the contacts, which considerably shortens their service life.

- Switch off the truck before the battery male connector is disconnected.
- Do not disconnect the battery male connector while the truck is switched on except in the case of an emergency.

⚠ CAUTION

Risk of accident in the event of an emergency shutdown of the truck whilst the load is raised.

In the event of an emergency shutdown of the truck whilst the load is raised, the fork carriage must be fully lowered once and the reach carriage fully retracted once. This ensures that the electronic support systems which prevent the truck from tipping over with a raised load are recalibrated.

- Before continuing to drive the truck, fully lower the load and fully retract the reach carriage.

Switching off the truck in an emergency while stationary

In an emergency, all functions of the truck can be shut down.

- Disconnect the battery male connector (1); see the chapter entitled "Disconnecting the battery male connector".

None of the truck functions are now available.

Switching off the truck in an emergency while it is moving

In an emergency, all functions of the truck can be shut down.

- Ensure that you have a secure grip on the truck; hold onto the steering wheel with your left hand.
- Press the emergency off switch (2).

The parking brake is applied and the truck brakes until it comes to a standstill. None of the truck functions are now available.

Procedure if truck tips over

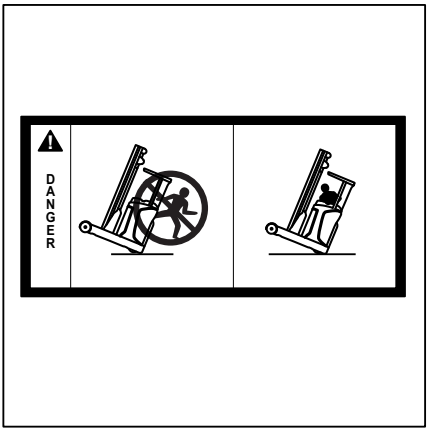

DANGER

If the truck tips over, the driver could fall out and slide under the truck with potentially fatal consequences. There is a risk to life.

Failure to comply with the limits specified in these operating instructions, e.g. driving on unacceptably steep gradients or failing to adjust speed when cornering, can cause the truck to tip over. If the truck starts to tip over, do not leave the truck under any circumstances. This increases the danger of being hit by the truck.

- Never jump off the truck.
- You must adhere to the rules of behaviour if the truck tips over.

Rules of behaviour if truck tips over:

- Hold onto the steering wheel with your hands.
- Brace your feet in the footwell.
- Keep your body, in particular your arms and legs, within the driver's compartment in the truck.
- Lean your body away from the direction of the fall.

Emergency lowering

DANGER

Risk to life if the load drops too quickly!

– Do not walk underneath the raised load!

DANGER

If the truck is operated with the hydraulic controller blocked, there is an increased risk of accident!

– After the emergency lowering procedure, have the malfunction rectified.
– Notify your authorised service centre.

In the event of a power failure, the forks can be lowered manually so that the truck can be moved to a safe position.

The emergency lowering valve is operated remotely by means of a flexible drive. The handle for operation is located on the reach carriage near the mast fixture.

WARNING

The load is lowered!

Control the speed by turning the handle of the flexible drive by a smaller or larger amount:

– Turning by a smaller amount: load is lowered slowly.
– Turning a larger amount: load is lowered quickly.

– After ensuring that no persons are in the vicinity of the truck, use the hexagon key (1) to slowly release the emergency lowering valve (2) so that the fork carriage can be lowered.
– Ensure that the valve is re-tightened once the forks have been lowered.
– Notify your authorised service centre.

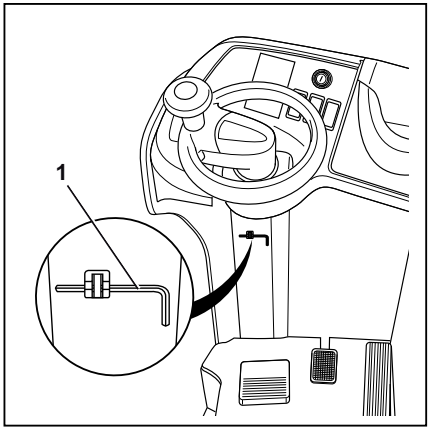

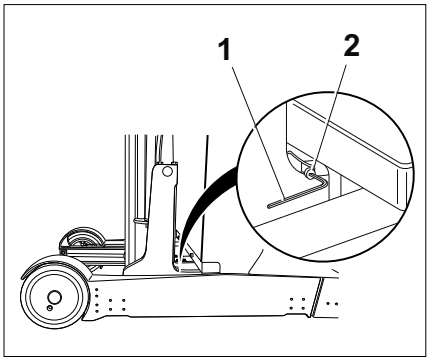

Towing

⚠ DANGER

The brake system on the towing vehicle may fail. There is a risk of accident!

If the brake system of the towing vehicle is not adequately sized, the vehicle may not brake safely or the brakes may fail. The towing vehicle must be able to absorb the tractive and braking forces from the unbraked towed load (total actual weight of the truck).

– Check the tractive and braking forces of the towing vehicle.

⚠ DANGER

The truck could drive into the towing vehicle when the towing vehicle brakes. There is a risk of accident!

When towing the truck, do not exceed the maximum recommended speed of 2.5 km/h. When towing on gradients, reduce speed to an absolute minimum and keep wheel chocks at hand.

– Set down the load and lower the fork arms close to the ground.

Towing with operational steering

DANGER

People can be crushed between the truck and towing vehicle during manoeuvring. There is a risk of fatal injury!

The towing vehicle may only be manoeuvred and the tow ropes may only be attached using a second person as a guide. This ensures that the driver of the towing vehicle and the mechanic attaching the tow ropes are aware of possible risks.

– Only manoeuvre with a guide.

If the truck's steering still functions and the brake is released, the truck can be towed with ropes.

– Select a towing speed that allows the truck and towing vehicle to be braked and controlled effectively at all times.

CAUTION

If the truck is not steered while it is being towed, it may veer out in an uncontrolled manner!

– The truck being towed must also be steered by a driver.

– Release the parking brake.

– Tow the truck.

– After towing, secure the truck against rolling away (e.g. by activating the parking brake or using wheel chocks).

– Do not remove the tow ropes.

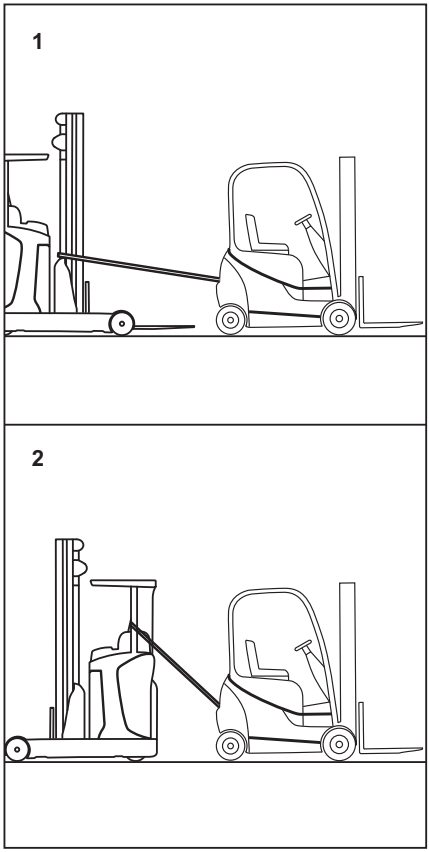

Lifting points for towing

Load-side lifting points

– Wind around lift mast (1).

Drive-side lifting points

– Wind around the two drive-side support posts of the overhead guard (2). On the left-hand side, guide the tow rope through the handhold on the support post.

Towing with non-operational steering

If the steering has failed, the truck can be towed using equipment such as steerable heavy-duty rollers. Depending on the design,

the heavy-duty rollers must be placed underneath the drive wheel or underneath the posts on the side of the truck. As the drive wheel does not come into contact with the ground when using this towing method, the brakes can also no longer operate. Therefore, please observe the safety information in the section entitled "Releasing the brakes mechanically".

Emergency steering (variant)

A pinion shaft for turning the steering manually is available as special equipment.

⚠ CAUTION

This emergency steering pinion may only be used when the battery male connector is disconnected.

Connecting and disconnecting the battery male connector

Connecting the battery male connector ▷

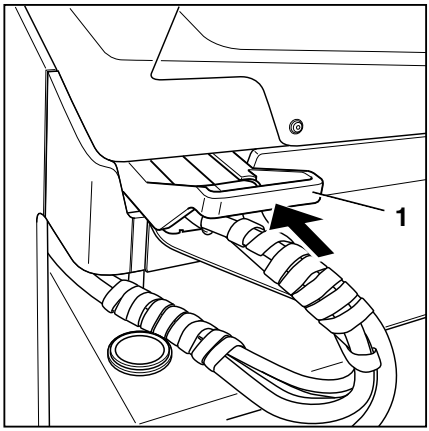

⚠ CAUTION

Risk of component damage!

If the battery male connector is connected while the key switch is on (under load), a jump spark will be produced. This can damage the contacts and considerably shorten their service life.

– Do not connect the battery male connector while the key switch is switched on.

– Ensure that the battery male connector and the plug connection are dry, clean and free of foreign objects.

– Insert the battery male connector (1) fully into the plug connection on the truck.

⚠ CAUTION

There is a risk of short circuit if the cables are damaged.

– Ensure that the battery cable is not crushed when inserting the battery tray into the truck.

NOTE

The battery male connector of a lithium-ion battery has additional contacts to allow the battery to communicate with the truck control unit. The connection procedure is the same for all battery male connectors.

Disconnecting the battery male connector

CAUTION

Risk of component damage!

If the battery male connector is disconnected while the key switch is on (under load), an arc will be produced. This can lead to erosion at the contacts, which considerably shortens their service life.

– Do not disconnect the battery male connector while the key switch is switched on.

– Disconnect the battery male connector (1) from the plug connection by pulling in the direction of the arrow.

– Place the battery male connector on the battery.

CAUTION

There is a risk of short circuit if the cables are damaged.

– Lay the battery cable on the battery. Ensure that the cable is not crushed when either removing or inserting the battery.

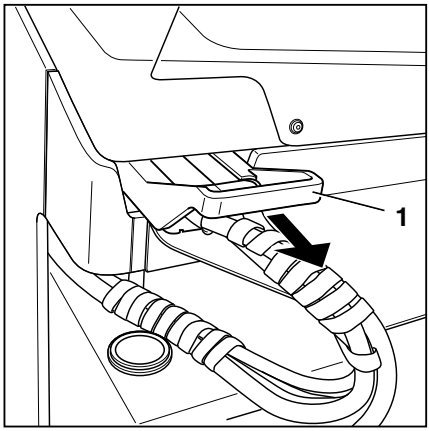

NOTE

The battery male connector of a lithium-ion battery has additional contacts to allow the battery to communicate with the truck control unit. The disconnection procedure is the same for all battery male connectors.

Handling the lead-acid battery

Safety regulations when handling the battery

– National statutory provisions for the country of use must be followed when setting up and operating battery charging stations.

⚠ CAUTION

Risk of component damage!

Incorrect connection or incorrect operation of the charging station or battery charger may result in damage to components.

– Follow the operating instructions for the charging station or battery charger and for the battery.

– Observe the following safety regulations when maintaining, charging and changing the battery.

Maintenance personnel

Batteries may only be charged, maintained or replaced by properly trained personnel in accordance with the instructions from the manufacturers of the battery, battery charger and truck.

– Follow the handling instructions for the battery and the operating instructions for the battery charger.

– Observe the following safety regulations when maintaining, charging and changing the battery.

WARNING

Risk of crushing/shearing!

The battery is very heavy. There is a risk of serious injury if any parts of the body are caught under the battery.

There is a risk of serious injury if limbs get crushed between the battery and the truck frame.

- Always wear safety shoes when replacing the battery.
- When handling the battery, always make sure that no limbs get crushed between the battery and the truck frame.

The battery must only be replaced in accordance with the directions in these operating instructions.

- When charging and maintaining the battery, observe the manufacturer's maintenance instructions for the battery and battery charger.

Fire protection measures

DANGER

Risk of explosion due to flammable gases!

During charging, the battery releases a mixture of oxygen and hydrogen (oxyhydrogen gas). This gas mixture is explosive and must not be ignited.

There must be no flammable materials or spark-forming operating materials within 2 m of either the truck when it is parked for charging or the battery charger.

When working with batteries, take the following safety precautions.

- Keep away from naked flames and do not smoke.
- Ensure that work areas are adequately ventilated.
- Fully extend the battery together with the reach carriage to the load side before charging the battery in the truck.
- If fitted, open the door of the driver's cab (variant) fully.

- Disconnect the battery male connector before charging and only when the truck and battery charger are switched off.
- Expose the surfaces of the battery cells.
- Do not place any metal objects on the battery.
- Have fire extinguishing equipment ready.

Lifting accessories

The battery may only be removed with suitable lifting accessories; see the chapter entitled "Replacing the battery using a crane"

⚠ DANGER

Risk of accident!

The battery could fall from the lifting accessory, or the lifting accessory could tip over or become damaged. There is a risk of fatal injury.

- Use a suitable lifting accessory with a load capacity (see operating instructions or nameplate) that at least matches the battery weight (see battery identification plate).
- Only remove the battery when the truck is on level, smooth ground with sufficient load capacity.

Battery weight and dimensions

⚠ DANGER

Risk of tipping due to change in battery weight!

The battery weight and dimensions affect the stability of the truck. When replacing the battery, the weight ratios must not be changed. The battery weight must remain within the weight range specified on the nameplate.

- Do not remove or change the position of ballast weights.
- Note the battery weight.

Maintaining the battery

The cell covers of the battery must be kept dry and clean.

Terminals and cable shoes must be clean, lightly coated with battery grease and screwed on tightly.

– Neutralise any spilt battery acid immediately.

– Observe the safety regulations for handling battery acid; see the chapter entitled "Battery acid".

Damage to cables and battery male connectors

⚠ CAUTION

There is a risk of short circuit if the cables are damaged.

Do not crush the battery cable when retracting the reach carriage with the battery.

– Check the battery cable for damage.

– When removing and installing the battery, ensure that the battery cables are not damaged.

▷

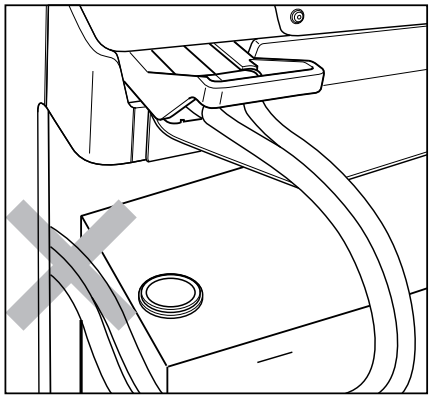

⚠ CAUTION

Potential for damage to the male battery connector.

If the battery male connector is disconnected or connected while the key switch is switched on or the battery charger is under load, an arc is produced at the battery male connector. This can lead to erosion at the contacts and can considerably shorten the service life of the contacts.

– Switch off the key switch or battery charger before the battery male connector is disconnected or connected.

– Do not disconnect the battery male connector while under load, except in an emergency.

Maintaining the battery

⚠ DANGER

Risk to life!

– Observe the chapter "Safety regulations for handling the battery".

WARNING

Battery acid is toxic and corrosive!

– Observe the safety regulations in the "Battery acid" chapter.

NOTE

Battery maintenance is carried out in accordance with the battery manufacturer's operating instructions! The operating instructions for the battery charger must also be followed. Only the instructions that came with the battery charger are valid. If any of these instructions are not available, please request them from the dealer.

The battery maintenance is composed of the following sections "Checking the battery condition, acid level and acid density", "Checking the battery charge status", "Charging the battery" and "Equalising charge to prevent a deep discharge of the battery" together.

Checking the battery condition, acid level and acid density

DANGER

Danger to life and limb!

– Observe the instructions in the chapter entitled "Safety regulations when handling the battery".

WARNING

Battery acid is toxic and corrosive!

– Observe the safety regulations in the chapter entitled "Battery acid".

CAUTION

Damage to the battery possible!

– Follow the information in the operating instructions for the battery.

– Extend the battery together with the reach carriage fully to the load side for maintenance.

- Keep away from open flames and do not smoke.
- Ensure that work areas are adequately ventilated.
- Expose the surfaces of the battery cells.
- Do not place any metal objects on the battery.
- Inspect battery for cracked housing, raised plates and acid leaks.
- Have defective batteries repaired by the authorised service centre.
- Open filler cap (1) and check the acid level. ▷

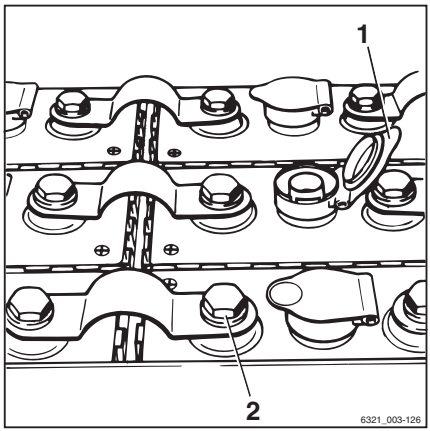

For batteries with "caged cell plugs", the liquid must reach the bottom of the cage.

For batteries without "caged cell plugs", the liquid must reach a height of approx. 10 to 15 mm above the lead plates.

- Top up low fluid with distilled water only.
- Rinse away spilt battery acid immediately using plenty of water.
- Clean the battery cell cover and dry if necessary.
- Remove any oxidation residue on the battery terminals and battery-terminal clips and grease them with acid-free grease.
- Tighten the battery-terminal clips (2) to a torque of 22 - 25 Nm (depending on the size of the terminal screws used).
- Check the acid density using an acid siphon.

After charging, this value must be between 1.28 - 1.30 kg/l.

For a discharged battery, the acid density must be **no lower** than 1.14 kg/l.

- Close the filler cap (1) again.

Checking the battery charge status

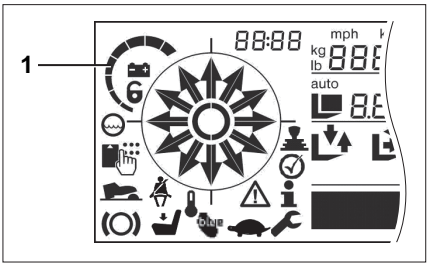

CAUTION

Deep discharges shorten the service life of the battery.

Avoid a discharge to below 25% of the nominal capacity (0% on the display). This can cause a potential deep discharge of the battery.

– Charge batteries if a residual capacity of 0% is displayed. Never leave batteries in a discharged state. This also applies to partially discharged batteries.

The discharge process is monitored so that the battery is protected against deep discharge. To prevent damage, the battery must be charged when its residual capacity falls below 25%. The recommendation is to drive to the charging station soon. Due to the remaining residual capacity, you do not have to drive to the charging station immediately.

NOTE

The battery discharge indicator characteristic curve must be set in accordance with the battery installed. See "Setting battery data".

– Press the emergency off switch.

– Switch the truck on.

– Read the charge status on the display-operating unit.

After connecting a fully charged battery:

- All of the display segments (1) light up (100%) after a few moments. As the capacity decreases, the segments go out one after the other. If the permissible discharge level of 25% residual capacity is reached, only the last segment continues to flash. An optional hydraulic limitation or driving limitation can be activated by the operating company or the authorised service centre.

Charging the battery

– Park the truck securely (refer to the chapter entitled "Parking the truck securely").

DANGER

Danger to life and limb!

– Observe the instructions in the chapter entitled "Safety regulations when handling the battery".

WARNING

Battery acid is toxic and corrosive!

– Observe the safety regulations in the chapter entitled "Safety regulations for handling consumables/battery acid".

CAUTION

Risk of component damage!

Incorrect connection or operation of the charging station or battery charger may result in damage to components!

– Follow the operating instructions for the charging station or battery charger and for the battery.

CAUTION

Potential for damage to the male battery connector!

– Before the battery male connector is disconnected or connected, the truck and the battery charger must be switched off.

NOTE

Battery maintenance is carried out in accordance with the battery manufacturer's operating instructions. The operating instructions of the battery charger used must also be followed. If any of these instructions are missing, they must be requested from the dealer.

Lead or gel batteries are used as traction batteries. Because the various types have different structures, the respective matching battery chargers must be used. Gel batteries are subject to special charging and maintenance provisions. The guidelines from the respective manufacturer must be followed.

– Fully extend the battery together with the reach carriage to the load side before charging the battery in the truck (refer to the chapter entitled "Replacing the battery").

– Switch off the truck.

- Disconnect the battery male connector.
- Ensure that work areas are adequately ventilated.
- If fitted, open the door of the driver's cab (variant) fully.
- Do not place any metal objects or tools on the battery.
- Keep away from naked flames. Do not smoke.
- Before the charging process, check the battery cable and charging cable for damage. Change damaged cables.
- Attach the battery male connector to the battery charger plug.
- Start the battery charger. Follow the information in the operating instructions for the battery and the battery charger (equalising charge).

NOTE

Note the information in the operating instructions for the battery charger (equalising charge).

- After the charging operation is completed, switch off the battery charger.

WARNING

Risk of explosion!

The plug may only be disconnected from the socket when the truck and battery charger are switched off.

- Disconnect the battery male connector from the plug on the battery charger.
- Reconnect the battery male connector to the truck (see the chapter entitled "Commissioning/connecting the battery male connector").
- Fully retract the battery together with the reach carriage to the drive side. Take care not to damage the battery cable when retracting.

– Ensure that the battery is securely locked (see the chapter entitled "Actuating the battery lock").

Equalising charging to preserve the battery capacity

Equalising charges ensure that unevenly charged battery cells are evenly charged again. This preserves the service life of the battery and the battery capacity.

An equalising charge should be carried out in accordance with the battery manufacturer's instructions several times a month after the normal charging process.

NOTE

Dependent on the battery charger used, the equalising charge might not begin until 24 hours have elapsed. Therefore, a period when no shifts are running, such as the weekend, is ideal for performing the equalising charge.

– Observe the information in the operating instructions of the charger regarding how to perform an equalising charge.

Starting the equalising charge

– Charge the battery.

– After charging, leave the battery in the charger.

The battery charger remains switched on. Depending on the type of battery charger, the equalising charge starts between 6 and 24 hours after the end of a normal charging process. The equalising charge takes up to 2 hours.

– Please refer to the operating instructions from the manufacturer of the battery charger.

Ending the equalising charge

The equalising charge ends automatically. If the battery is required during this process, you can interrupt the equalising charge by

pressing the "stop button" on the battery charger.

– Please refer to the operating instructions from the manufacturer of the battery charger.

⚠ CAUTION

Risk of component damage!

If the plug for the battery charger is disconnected from the battery male connector while the battery charger is switched on, an arc is produced. This can lead to erosion at the contacts, which considerably shortens their service life.

– Switch off the battery charger before disconnecting the charging cable.

– Switch off the battery charger.

– Disconnect the battery male connector from the battery charger plug.

– Insert the battery male connector fully into the plug connection on the truck.

Handling the lithium-ion battery (variant)

Safety regulations for handling the lithium-ion battery

First-aid measures

⚠ WARNING

Risk of injury!

Escaping gases can lead to breathing difficulties.

Course of action required if gases or liquids escape

– Immediately ventilate the area or go out into the fresh air; in more serious cases, call a doctor immediately.

Skin irritation can occur in the event of contact with the skin.

– Thoroughly wash the skin with soap and water.

Eye irritation can occur in the event of contact with the eyes.

– Immediately rinse eyes thoroughly with water for 15 minutes, then consult a doctor.

Maintenance personnel

The lithium-ion battery is virtually maintenance-free and can be charged by the driver.

– If you have any questions, please contact your authorised service centre.

– The handling instruction for the battery and the operating instructions for the battery charger must be followed.

– Observe the following safety regulations when maintaining, charging and changing the battery.

WARNING

Risk of crushing/shearing!

The battery is very heavy. There is a risk of serious injury if any parts of the body are caught under the battery.

If parts of the body are wedged between the battery door and the edge of the chassis when the battery door is closed, this could lead to injuries.

- Always wear safety shoes when replacing the battery.
- Only close the battery door if there is no part of the body between the battery door and the edge of the chassis.

The battery must only be replaced in accordance with the directions in these operating instructions.

- When charging and maintaining the battery, observe the manufacturer's maintenance instructions for the battery and battery charger.

Fire protection measures

DANGER

There is a risk of damage, short circuiting and explosion!

- Do not place any metal objects or tools on the battery.
- Keep away from naked flames and do not smoke.

DANGER

Increased risk of fire!

Damaged lithium-ion batteries pose an increased fire hazard.

In the event of a fire, large quantities of water are the best option to cool the battery.

- Evacuate the location of the fire as quickly as possible.
- Ventilate the location of the fire well, as the resulting combustion gases are corrosive if inhaled.

- Inform the fire brigade that lithium-ion batteries are affected by the fire.
- Observe the information provided by the battery manufacturer regarding the procedure in the event of a fire.

Battery weight and dimensions

DANGER

Risk of tipping due to change in battery weight!

The battery weight and dimensions affect the stability of the truck. When replacing the battery, the weight ratios must not be changed. The battery weight must remain within the weight range specified on the nameplate.

- Do not remove or change the position of ballast weights.
- Observe the battery weight.

General safety regulations for lithium-ion batteries

The following safety regulations generally apply to operating lithium-ion batteries.

- Comply with the specifications stated in the safety data sheets of the battery manufacturer.
- Protect the battery against mechanical damage to prevent internal short circuits.
- If batteries have even the slightest external damage, dispose of them in accordance with national regulations for the country in which they are being used.
- Do not expose batteries directly to continuously high temperatures or heat sources, such as direct sunlight.
- Train employees in how to handle lithium-ion batteries correctly.

Approved lithium-ion batteries

⚠ DANGER

Risk of tipping if the truck is operated with an incorrect battery

Installation of an incorrect battery reduces the stability of the truck.

The batteries approved for this truck vary in terms of their size, weight and capacity.

The truck may only be operated with a battery that is approved for its battery tray.

Only use lithium-ion batteries that have been approved by STILL for use with this truck. The dimensions and the weight of the replacement battery must precisely match the dimensions and the weight of the original battery. The truck may only be operated with a battery that is approved for its battery tray. The installation of an incorrect battery poses a risk to the stability of the truck.

– If you have any questions regarding the batteries approved for this type of truck, contact your authorised service centre.

Lithium-ion batteries "GGS Li-ion 48 V (BG4)" 9.8 kWh and 39.2 kWh

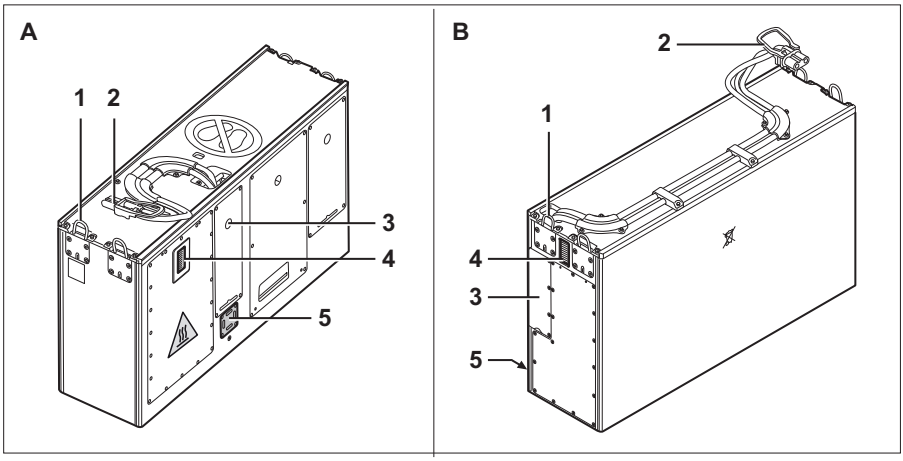

A	Battery group 4.1 (9.8 kWh)
B	Battery group 4.2, 4.3 (39.2 kWh)
1	Lifting eyes
2	Battery male connector
3	Technology compartment
4	Display
5	Safety valve

WARNING

Risk of accident as a result of weakened lifting eyes.

If bent lifting eyes are straightened, they will lose their rigidity. The lifting eyes will then be unable to support the weight of the battery. The battery may fall.

- Do **not** straighten bent lifting eyes.
- Have any bent lifting eyes replaced by your authorised service centre.

NOTE

When changing from lead-acid batteries to lithium-ion batteries, the authorised service centre must adjust the truck electronics.

Regulations for storing lithium-ion batteries

NOTE

Lithium-ion batteries are classified as dangerous goods according to class 9.

The following recommendations apply:

- Store batteries at a height between 60 cm and 120 cm so that they are not damaged if they fall
- Store the batteries in a segregated area suitable for fire protection (container or safety cabinet)
- Store the batteries at a temperature between +15°C and +30°C and air humidity from 0% to 80%

Observe the following regulations for safe storage of the batteries:

– Store batteries fixed onto pallets and secured against overturning.

– Observe the floor load capacity of the storage area; refer to the manufacturer's specifications regarding battery weight

– To protect batteries against moisture, do not store them directly on the floor

– Due to the fire risk, store batteries outside buildings

– Store in a cool, dry and well-ventilated area

– Never subject the battery to temperatures below -35°C and above 80°C.

Long-term storage below -10°C or above 50°C has a negative impact on the service life of the battery.

– After twelve months, check the charging state of the battery and recharge if necessary

– Cordon off the warehouse area

– Only persons who are aware of the risks and safety regulations may access this area

– Protect against direct sunlight

– Protect against precipitation

- Store in a way that protects the batteries against short circuits
- Store batteries at a safe distance from flammable materials
- Do not store batteries together with metallic objects
- Store lithium-ion batteries separately from other types of batteries (no mixed storage).
- Maintain a safety margin of at least 2.5 m to other goods
- To avoid a deep discharge, observe the specifications of the battery manufacturer regarding the maximum permissible storage period
- If you have any questions, please contact your authorised service centre.

Checking the battery charge status (lithium-ion battery)

The charge state of the lithium-ion battery can be read on the display-operating unit of the truck and on the display of the lithium-ion battery. The two displays have different scale gradations and are therefore not identical.

Reading the display-operating unit of the truck ▷

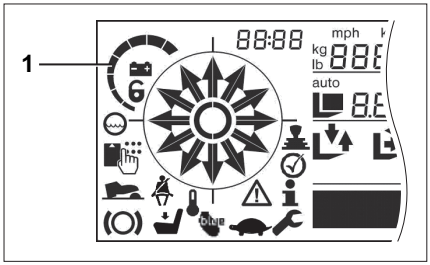

All segments (1) of the display (100%) light up a few moments after a fully charged battery is connected. As the capacity decreases, the segments go out one after the other. If the discharge level of 25% residual capacity is reached, only the last segment continues to flash. An optional hydraulic limitation or driving limitation can be activated by the operating company or your authorised service centre.

Reading the display of the lithium-ion battery

The battery indicator is located on the side of the battery tray. In addition to the display-operating unit, this too shows the charging status of the lithium-ion battery. Warnings are only issued on the battery indicator.

– If you have any questions, contact your authorised service centre.

Charging state LEDs

When the battery is connected to the truck and the truck is switched on, the charge state LEDs (3) display the charge state in 10% increments. The charge state LEDs can light up green and red.

- A charge state of 0% to 10% is indicated by a red bar.

  If this bar flashes, the charge state is < 2%.

  The truck can no longer be moved.
- A charge state of > 10% to 30% is indicated by yellow bars
- A charge state of > 30% to 100% is indicated by green bars

When charging, the charging state LEDs (3) light up green as a chaser light.

Service LED

The service LED (1) lights up red if the battery function is significantly restricted or if operation is not possible.

– Contact your authorised service centre.

Temperature LED

The temperature LED indicates an increased temperature. Battery power is reduced or switched off.

The LED remains active for the duration of the run-on time or until the temperature falls to within the normal range.

▷

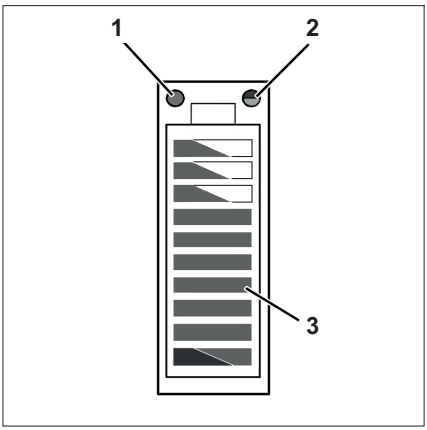

1 Service LED (red)
2 Temperature LED (yellow/red)
3 Charge state LEDs (red/green)

LED	Temperature	Consequence
Flashing yellow	Slightly increased (>60°C)	Power reduction
Solid yellow	Increased (>65°C)	Shut-off
Flashing red	Significantly increased (>70°C)	Shut-off
Solid red	Greatly increased (>75°C)	Shut-off

Procedure if a lithium-ion battery has a low charge state

To prevent deep discharge of the lithium-ion battery, truck performance limitations are imposed once the charge state of the battery drops to ≤ 10%.

- If the charge state drops below 15%, drive to the charging station and recharge the battery.
- If the battery switches off, tow the truck to the charging station.
- Charge the battery.

Charging the lithium-ion battery upon delivery

The lithium-ion battery may not be fully charged at the time of delivery.

The battery management system for lithium-ion batteries remains active even if the battery is in a quiescent state. Therefore, the battery continues to discharge even when the truck is switched off or during storage.

To prevent deep discharge of the battery when it is stored for long periods, fully charge the battery once directly after delivery.

Charging the lithium-ion battery

Charging the lithium-ion battery

⚠ CAUTION

Risk of damage to components!

Incorrect connection or incorrect operation of the charging station or battery charger may result in damage to components!

– Follow the operating instructions for the charging station or battery charger and for the battery.

⚠ CAUTION

Risk of damage to components!

Battery male connectors and battery charger connectors from different manufacturers are not compatible and may cause damage.

– Use battery male connectors and battery charger connectors produced by the same manufacturer.
– If the connectors are from different manufacturers, please contact your authorised service centre.

NOTE

To prevent deep discharge of the lithium-ion battery, truck performance limitations are imposed once the charge state of the battery drops to a certain level. The battery must be charged before the charge state drops below 15%.

For information on reading the charge state of the battery, see the section on "Checking the battery charge status".

– Fully extend the battery and the reach carriage to the load side before charging the battery in the truck (see the chapter on "Replacing the battery").
– Switch off the truck.
– Disconnect the battery male connector.
– If fitted, open the door of the driver's cab (variant) fully.
– Keep away from naked flames and do not smoke.

– Check the battery cable for damage and have it replaced by the authorised service centre if necessary.

DANGER

Risk of damage, short circuit and explosion!

– Do not place any metal objects or tools on the battery.
– Keep away from naked flames and do not smoke.

– Connect the battery male connector to the plug on the battery charger.

– Start the battery charger.

The charging process starts automatically. The display signals the charging process by illuminating the LEDs as a chaser light.

The charger indicates when the battery is fully charged. Only disconnect the battery from the charger if no current is flowing.

The battery has no memory effect. Therefore, it can be charged at any charge state without the capacity of the battery being impaired.

At ambient temperatures below 0°C, the charging process will take much longer.

NOTE

Observe the information in the operating instructions for the battery and the battery charger.

After charging

The battery charger will switch off automatically.

– Disconnect the battery male connector from the plug on the battery charger. Do not disconnect the battery male connector while the charger is switched on.

– Fully insert the battery male connector into the plug connection on the truck.

CAUTION

There is a risk of short circuit if the cables are damaged.

Do not crush the battery cable when retracting the reach carriage with the battery.

– Check the battery cable for damage.

– Fully retract the battery and the reach carriage to the drive side.

Recommissioning the lithium-ion battery following deep discharge

CAUTION

Damage to the battery from deep discharge!

A deeply discharged battery results in considerable cost and, potentially, an unusable battery due to cell damage.

– Always charge the battery before deep discharge begins.
– When taking the battery out of operation for a prolonged period (e.g. for company holidays), always ensure the battery is charged (30% - 100%).

The battery management system remains active even if the battery is in a quiescent state. Therefore, the battery discharges even when the truck is switched off or during storage. When the battery charge drops below a permitted discharge limit, this is known as deep discharging.

The deep discharge begins when the last segment on the battery indicator flashes red. The battery switches off the power supply to the truck. It is no longer possible to drive the truck.

The deep discharge progresses in three phases:

1 At the start of the deep discharge, the customer can still charge the battery himself for a limited period
2 If the deep discharge continues, only the authorised service centre can put the battery back into service
3 If the deep discharge continues beyond the first two phases, the battery is irreparably damaged

Time periods for putting back into service (guide values)		
Battery 4.1 (9.8 kWh)	**Battery 4.2, 4.3 (39.2 kWh)**	**Recommissioning**
Phase 1: Approx. 8 days	Phase 1: Approx. 32 days	Customer (charging the battery)
Phase 2: Approx. 97 days more	Phase 2: Approx. 97 days more	Authorised service centre
Phase 3: The battery is irreparably damaged.		No longer possible

Display on the battery indicator during deep discharge	
Phase of the deep discharge	**Display on the battery indicator**
Phase 1: Start of the deep discharge. It is no longer possible to drive the truck. In this phase, the customer can still charge the battery himself using the battery charger.	Initially: The last charge state LED flashes red. Later: The battery display is OFF. The service LED lights up red.
Phase 2: In this phase, the authorised service centre can put the battery back into service. If the battery is not put back into service during this period, it will be irreparably damaged. Phase 3: The battery is irreparably damaged.	 The battery display is OFF. The service LED is OFF.

Replacing and transporting the battery

Commissioning batteries that are delivered separately

Proper commissioning must be performed if the truck was ordered without a battery or if it

was supplied with a dry pre-charged battery (only lead-acid batteries). In this situation, note the information and guidelines from the battery manufacturer.

If the battery was procured separately to the truck, the following must be checked by the authorised service centre:

- Nominal voltage
- Required minimum weight
- Fitted battery male connector
- Characteristic curve for battery discharge (lead acid batteries)
- Battery approved for this truck by STILL

Alternating between a lead-acid battery and a lithium-ion battery

Before changing from a lead-acid battery to a lithium-ion battery, the authorised service centre must perform a one-off conversion on the truck.

NOTE

The only intended use of a lead-acid battery in a truck with a lithium-ion battery is in the event of an emergency; for example, if the lithium-ion battery is faulty.

Trucks with lithium-ion-battery ex works

Battery tray	Truck operation ex works	After the conversion
323	Lithium-ion	Lithium-ion/lead-acid
324	Lithium-ion	Lithium-ion/lead-acid
325	Lithium-ion	Lithium-ion (*) / lead-acid (*)
326	-	-
		(*) Also requires a change of battery tray

Trucks with lead-acid battery ex works

Battery tray	Truck operation ex works	After the conversion
323	Lead-acid	Lithium-ion/lead-acid
324	Lead-acid	Lithium-ion/lead-acid
325	Lead-acid	Lithium-ion (*) / lead-acid (*)

Battery tray	Truck operation ex works	After the conversion
326	Lead-acid	-
		(*) Also requires a change of battery tray

Only use lithium-ion batteries that have been approved by STILL for use with this truck. Also refer to the chapter entitled "Approved lithium-ion batteries".

– If you have any questions regarding the batteries approved for this type of truck, contact your authorised service centre.

After installation of the battery

If the battery installed is a lithium-ion battery, no settings need to be adjusted using the display-operating unit. The truck automatically detects the new lithium-ion battery.

If the battery installed is a lead-acid battery, the battery capacity and the battery type must be checked via the display-operating unit. Also refer to the chapter entitled "Entering truck operating data via the display-operating unit". If the settings are incorrect, then the battery charge is not displayed correctly. In the worst case, the battery may be damaged by a deep discharge.

General information on battery replacement

⚠ CAUTION

Risk of components being damaged by the lifting accessory and battery rolling away!

The lifting accessory and battery may roll away in an uncontrolled manner if the battery is not removed on a level, smooth floor with sufficient load capacity.

– Follow the operating instructions for the lifting accessory used.
– Always remove the battery on a level, smooth floor with sufficient load capacity.

⚠ WARNING

Risk of crushing from moving parts!

Observe the information signs on the truck; see the chapter entitled "Labelling points".

The battery sits in a battery frame. To replace the battery, this frame is extended in the fork direction together with the reach carriage. When retracted, this battery frame is locked mechanically.

The battery can be removed using the following lifting devices:

- Forklift truck or crane (for standard equipment)
- Change frame (for variant with roller channel for side battery replacement)

The load capacity of the lifting accessory used must at least match the battery weight (see the battery nameplate).

NOTE

If the reach system of the truck is not working due to a battery problem, the battery must be removed by your authorised service centre.

Incompatibility of battery connectors from different manufacturers

⚠ CAUTION

Risk of fire from using battery connectors from different manufacturers!

The battery connectors on the truck and on the battery must be from the same manufacturer. Poor contact pairing between battery connectors from different manufacturers can result in overheating.

– Check the manufacturer of the battery connector before replacing the battery.
– Connect battery connectors from this manufacturer only.

Actuating the battery lock

Before the release lever for the battery lock can be pulled, the battery lock must be released. The battery lock is released via the "Retract reach carriage" operating function on the joystick 4Plus or the corresponding fingertip switch.

The battery lock is only released if the truck is stationary.

Releasing the battery lock

▷

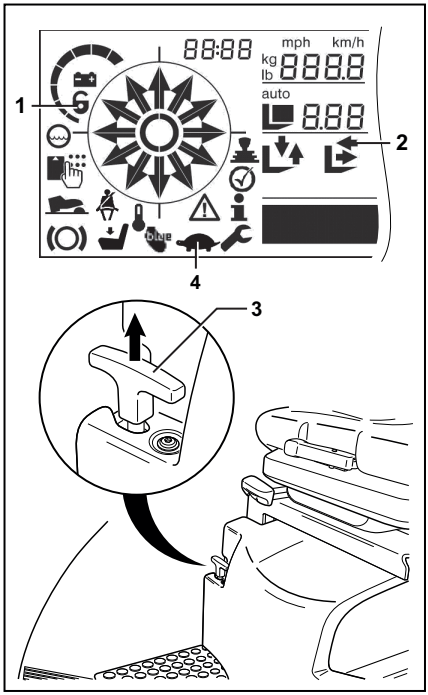

- Bring the truck to a standstill.
- Press and hold the foot switch
- Use the actuating lever (joystick or fingertip switch) to retract the reach carriage to the drive side until the reach carriage stops.
- Continue to actuate the actuating lever. After 5 seconds the "lock"(1) symbol appears in the display.
- Release the actuating lever. After approx. 2 seconds, the (2) arrow shows that the reach carriage can be retracted further into the end position. If the end position is not reached within 2 minutes, or if the accelerator pedal is pressed, the operation is cancelled. The "lock" symbol is hidden again.
- Retract the reach carriage to the end position to unlock the battery.
- Pull the release lever (3) for the battery lock upwards. The battery is unlocked.

When the battery is unlocked:

- An acoustic warning signal is heard
- The "creep speed"(4) symbol is displayed
- The driving speed is limited to 1.6 km/h
- The hydraulic functions are restricted

- Eject the battery together with the reach carriage to the load side.

Locking the battery

- Press and hold the foot switch

– Use the actuating lever (joystick or fingertip switch) to retract the reach carriage together with the battery to the drive side into the end position.

The battery lock audibly engages. The battery is locked. If the battery lock does not engage, the battery was not extended by at least a third to the load side after unlocking. Extend and retract the battery again to lock the battery.

The acoustic warning signal stops. The driving speed and hydraulic functions are no longer restricted.

– After locking the battery, move the reach carriage to the load side out of the end position. The "lock" and "creep speed" symbols disappear from the display.

NOTE

In normal operation, the acoustic warning signal together with the "lock" and "creep speed" symbols indicate that the battery lock sensor has a mechanical defect. Have any defects rectified by the authorised service centre.

Adjusting the battery lock

Adjustment instructions

Battery trays for traction batteries are manufactured with relatively large tolerances. To ensure that the lock of the battery frame in which the battery sits is in good working order, its bump stops must be adjusted. This happens in the factory during commissioning. However, if the customer procures the battery himself or if the battery is replaced, the adjustment must be carried out on site.

– For instructions of how to install and remove the battery, as well as for how to handle the battery, refer to the chapter entitled "Replacing the battery using a crane".

– Unlock the battery frame and slide it out. If necessary, use an extension cable and an adjacent battery.

▷

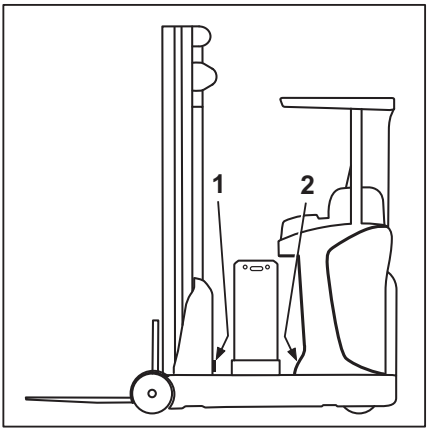

– Screw both rubber buffers fully into the exterior of the control compartment (1). Do not use flat washers.

– Insert the battery into the changing frame and fasten it to the load-side wall.

– Slide in the battery frame.

If the locking mechanism makes contact with the rubber buffers (1) once the lock is engaged, no further adjustment is required.

However, if an air gap remains between these rubber buffers and the battery, the gap must be calculated, e.g. by sliding in metal strips.

- A measurement of 1.5 mm is added to the measured distance, and suitable washers must be fitted between the wall and the rubber buffers (1) to match the size of the gap that has been calculated.
- The battery frame should strike both pads simultaneously. By using different washers for the rubber pads, the angle can be corrected slightly if necessary.

– Check that the lock works correctly and whether it is possible to pull the release lever by hand (refer to the chapter entitled "Actuating the battery lock".

If the lock does not engage or if it is difficult to pull the release lever, the washers must be reduced or the height of the rubber pads must be decreased.

If the lock does not engage, it may also be necessary to increase the insertion distance of the battery frame. This is achieved by placing suitable washers beneath rubber buffers (2) on the load side.

If the lock still does not function properly despite all of these adjustment options, check whether the correct reach cylinder has been installed or whether the stops in the end positions have been set correctly using the reach travel measurement system.

Determine the average value when installing replacement batteries. The battery trays are different sizes to accommodate the different sizes of replacement batteries. In each case, the battery lock must be set to the largest tray.

Special notes for installing the lithium-ion battery

With the exception of the following special notes, lithium-ion batteries are replaced in the same way as lead-acid batteries.

– Push down the lifting eyes before inserting the battery with the reach carriage. Make sure that the lifting eyes **do not** protrude.

The lifting eyes may bend in the event of a collision with the truck.

– Lay the battery cable on the battery. Make sure that the cable does not come into contact with the truck during installation.

▷

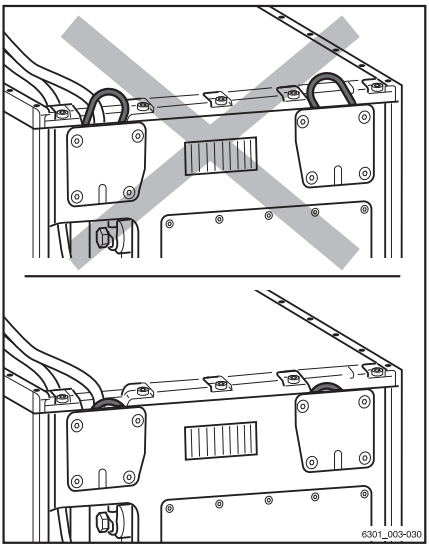

Replacing the battery using a lifting device

DANGER

The battery weight and its dimensions affect the stability of the truck.

When replacing the battery, the weight ratios must not be changed. The battery weight must remain within the weight range specified on the nameplate. The location of ballast weights must not be changed.

⚠ WARNING

Risk of crushing if the battery falls out.

The battery lock must only be released on horizontal, level ground using suitable devices.

Suitable devices include:

- Suitable lifting equipment (e.g. forklift truck, crane) with sufficient load capacity for lifting the battery
- Suitable harnesses
- A stationary or mobile battery change frame (follow the operating instructions for the battery change frame)

The battery lock lever may be actuated only when the truck is stationary and the reach carriage is fully retracted.

The battery sits in a frame. To replace the battery, this frame is extended in the load direction together with the reach carriage. Before the reach carriage is extended, the battery lock lever must be actuated. When the reach carriage is fully retracted, the battery frame is mechanically locked again.

Removing the battery

- Park the truck on a horizontal, level surface.
- Retract the reach carriage fully.
- Apply the parking brake.
- Unlock the battery lock (see the chapter entitled "Actuating the battery lock").
- Press the foot switch.

– Extend the reach carriage fully together with the battery (2). ▷

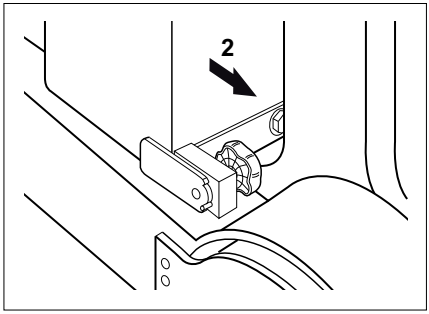

– Switch off the truck.

– Push the emergency off switch.

⚠ CAUTION

Risk of component damage!

If the battery male connector is disconnected while the truck is switched on (under load), an arc will be produced. This can lead to erosion at the contacts, which considerably shortens their service life.

– Switch off the truck before the battery male connector is disconnected.

– Do not disconnect the battery male connector while the truck is switched on except in the case of an emergency.

– Disconnect the battery male connector (3). ▷

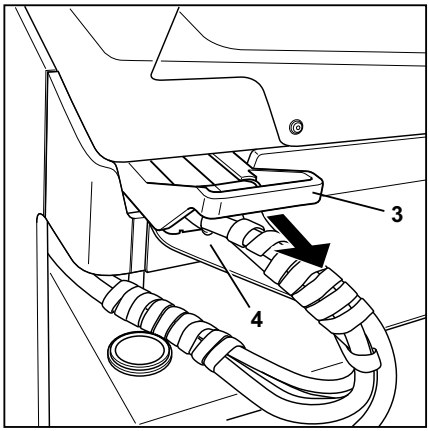

⚠ CAUTION

There is a risk of short circuit if the cables are damaged!

Lay the battery cable on the battery. Ensure that the cable is not crushed when removing and inserting the battery.

– Check the connection cables for damage.

For batteries with a greater installation depth, the battery cover of the truck must be removed. The screws on the battery cover can be loosened using the hexagon key for the emergency lowering mechanism. The hexagon key is located in the driver's compartment, underneath the steering wheel (see the chapter on "Emergency lowering").

– Remove the three screws on the battery cover (4). Remove the battery cover from the truck.

– Use a suitable lifting device to remove the battery from the battery frame; see the chapter on "Transporting the battery using a lifting device".

Installing the battery

⚠ WARNING

Risk of corrosion

The electrolyte (battery acid) is toxic and corrosive on contact.

- Observe the prescribed safety measures when handling battery acid.
- For newly charged batteries in particular, be aware of the risk of explosion in the area of the battery where gas may be released.

⚠ WARNING

Risk of explosion

The openings in the area of the battery where gas may be released must not be covered or sealed. An unrestricted air supply prevents the formation of potentially explosive gas mixtures. Do not create openings in the area of the battery where gas may be released, to ensure that any gases released cannot penetrate the driver's compartment.

The battery must fill the installation space with just a few millimetres of play. This makes it impossible for the battery to slip or tip over while the truck is in motion. The battery frame is intended for use with standard-compliant batteries. The batteries used must conform to the specified dimensional tolerances in accordance with this standard. This is required to ensure that the battery lock functions correctly.

- Use a suitable lifting device to insert the battery into the battery frame; see the chapter on "Transporting the battery using a lifting device".

⚠ CAUTION

Risk of short circuit

If the battery cover is not in place on the truck, water or dirt can damage the battery.

- Only commission the truck once the battery cover is in place.

- Attach the battery cover to the truck using the three screws
- Return the hexagon key for the emergency lowering mechanism to its position underneath the steering wheel in the driver's compartment.

Activities after installation of the battery

DANGER

If the battery is not locked correctly, it can slide out of the truck.

– Before the truck is commissioned, the battery lock must be checked to ensure that it is in good working order and is locked securely.

– If your truck is equipped with a Euro battery male connector, make sure that the voltage index pin (48 V) is in the correct position. The set voltage can be read through a display window (1).

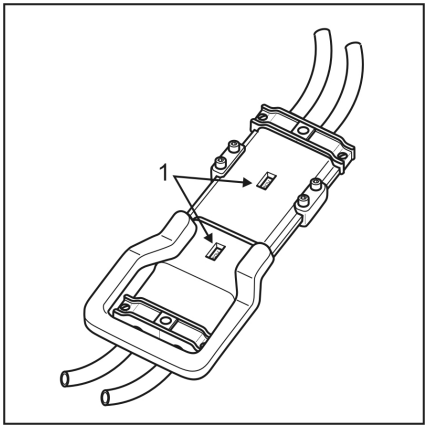

NOTE

- *Compare the nameplates on the truck and the battery. The battery must comply with the specifications on the nameplate regarding the voltage and weight.*
- ***Gel batteries** and **lithium-ion batteries** are subject to special charging/handling instructions. Follow the instructions provided by the respective manufacturer.*

CAUTION

Risk of component damage!

If the battery male connector is connected while the key switch is on (under load), a jump spark will be produced. This can damage the contacts and considerably shorten their service life.

– Do not connect the battery male connector while the key switch is switched on.

– Connect the battery male connector. Make sure that the battery cable cannot become trapped when retracting the reach carriage.

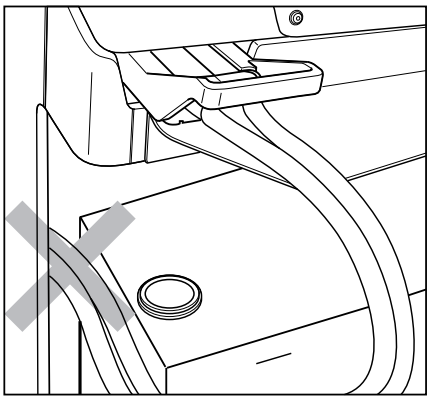

– Unlock the emergency off switch.

– Switch on the truck.

– Press the foot switch.

– Retract the reach carriage with the battery fully until the battery lock engages.

The lock must audibly engage. If necessary, the push down the release lever. If the battery frame is locked incorrectly, the driving speed is reduced and the message **A3405** is shown on the display-operating unit. This situation

can also be caused by a battery that is not standard-compliant or by a technical fault.

If the battery is not included in the scope of delivery, your authorised service centre must adjust the battery lock.

– For lead acid batteries, check the battery data (battery type and battery capacity) on the display-operating unit or re-enter this data; see the chapter on "Setting the battery data".

Changing the battery using the internal roller channel (variant)

As an option, this truck can also be equipped with a roller channel for battery replacement at the side.

⚠ DANGER

The battery weight and its dimensions affect the stability of the truck.

When replacing the battery, the weight ratios must not be changed. The battery weight must remain within the weight range specified on the nameplate. The location of ballast weights must not be changed.

⚠ WARNING

Risk of crushing if the battery falls out.

Releasing the battery lock, as described below, must only be carried out on horizontal, level ground using a suitable battery change frame.

The battery lock lever may be actuated only when the truck is stationary and the reach carriage is fully retracted.

Prerequisites for replacing the battery

– For the correct use of the battery change frame, refer to the information in the chapter entitled "Battery change frame" and the operating instructions, and comply with the manufacturer's safety regulations.

Maintenance personnel for batteries

Batteries may only be charged, maintained or changed by properly trained personnel

in accordance with the instructions of the manufacturers of the battery, battery charger and truck.

– The handling instructions for the battery and the operating instructions for the battery charger must be followed.

Positioning the truck correctly in relation to the battery rack

⚠ CAUTION

Before replacing the battery, ensure that the rollers for the battery transport in the battery rack are aligned with the rollers in the truck. Failure to do so could cause damage to the battery rack rollers and locking mechanism.

The truck must be placed in such a position relative to the battery rack that the transition of the battery between the truck and the battery rack can be performed without mechanical resistance.

– Make sure that the transfer height of the battery rack is correctly adjusted to that of the truck, refer to the chapter entitled "Battery change frame/Adjusting the transfer height".

– Position the truck and battery rack parallel to each other.

– Position the truck and the battery rack so that the roller channels of the truck and battery rack are exactly aligned with each other.

Extending the battery

The battery sits in a frame. To replace the battery, this frame is extended in the load direction together with the reach carriage. Before the reach carriage is extended, the battery lock lever must be actuated. When the reach carriage is fully retracted, the battery frame is mechanically locked again.

– Retract the reach carriage fully.

– Apply the parking brake.

- Release the battery lock (refer to the chapter entitled "Actuating the battery lock").
- Press the foot switch.
- Extend the reach carriage fully together with the battery (2). ▷

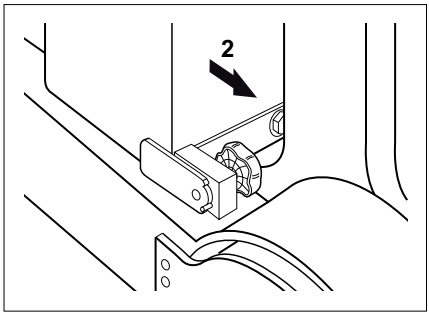

- Switch off the truck.
- Press the emergency off switch.

⚠ CAUTION

Risk of component damage!

If the battery male connector is removed while the truck is switched on (under load), an arc will be produced. This can lead to erosion at the contacts, which considerably shortens their service life.

- Switch off the truck before the battery male connector is disconnected.
- Do not disconnect the battery male connector while the truck is switched on except in the case of an emergency.

- Disconnect the battery male connector (3). ▷

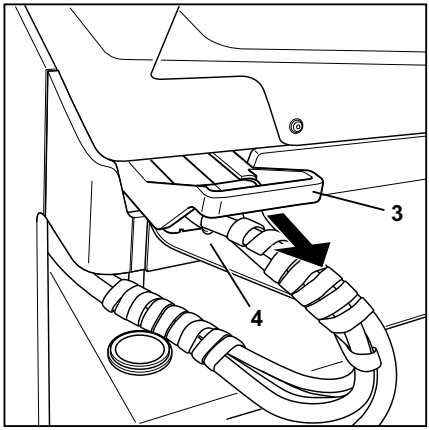

⚠ CAUTION

There is a risk of short circuit if the cables are damaged!

Position the battery cable on the battery in such a way that it cannot be crushed when removing or inserting the battery.

- Check the connection cables for damage.

Releasing the swing bolt

⚠ CAUTION

If the battery rolls out of the battery compartment when no external device is present, this can lead to material damage.

Before removing the battery, always have an external device in position.

⚠ CAUTION

Risk of injury from crushing and shearing points

Always actuate the swing bolts with just one hand and make sure that fingers are kept away from the rotation and clamping range.

The battery is held in position by a swing bolt.

– To release the tension, rotate the turning handle (1) anti-clockwise to the stop. ▷

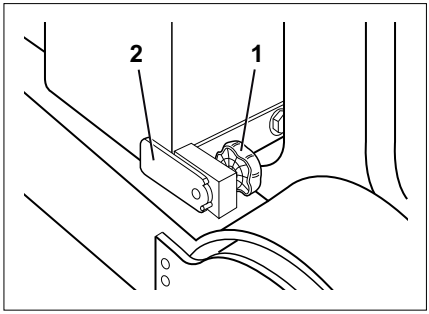

– Swing the swing bolt (2) up to the stop (3). ▷

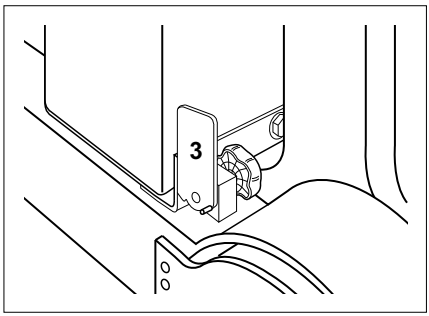

⚠ DANGER

The battery can now move freely and may roll away unimpeded, creating a risk of crushing!

People must not stand directly in the battery's direction of travel.

Do not place objects or any parts of the body between the battery and the truck chassis.

Do not attempt to keep hold of the battery if it rolls away.

– Pull the battery (4) on its roller channel out of the truck and on to a battery change frame.

– For the correct use of the battery change frame, refer to the information in the chapter entitled "Battery change frame" and the operating instructions, and comply with the manufacturer's safety regulations.

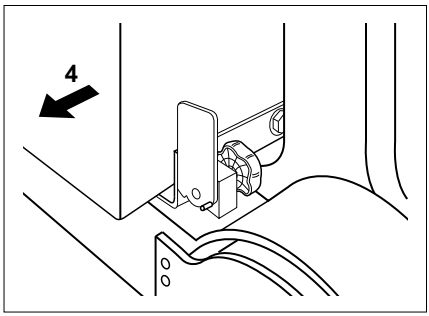

The battery is installed and secured in the reverse sequence.

Activities after installation of the battery

DANGER

If the battery is not locked correctly, the battery can slide out of the truck, with potentially fatal consequences!

– Before commissioning the truck, the battery lock must be checked for correct operation and secure locking.

– If your truck is equipped with a Euro battery male connector, make sure that the voltage index pin is in the correct position. The set voltage can be read through a display window (1). These trucks are operated with a 48-volt nominal battery voltage.

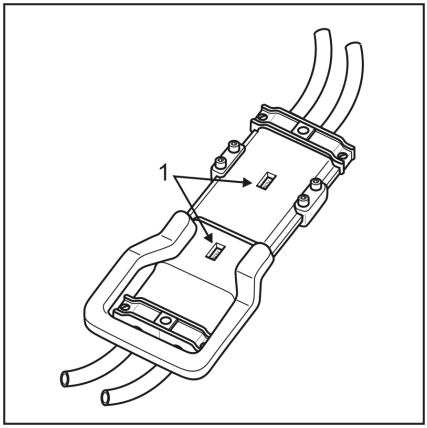

NOTE

- *The battery must comply with the specifications on the nameplate regarding voltage and weight. Compare the nameplates for the truck and battery.*
- ***Gel batteries** are subject to special charging/maintenance/handling instructions. The guidelines from the respective manufacturer must be observed.*

CAUTION

Risk of component damage!

If the battery male connector is connected when the truck is switched on (under load), a jump spark will be produced. This can damage the contacts and considerably shorten their service life.

– Do not connect the battery male connector when the truck is switched on.

– Make sure that the truck is switched off before connecting the battery male connector.

– Connect the battery male connector.

- Make sure that the battery cable cannot become trapped when the reach carriage is retracted with the battery.
- Unlock the emergency off switch.
- Switch on the truck.
- Press the foot switch.
- Retract the reach carriage with the battery fully until the battery lock engages.

▷

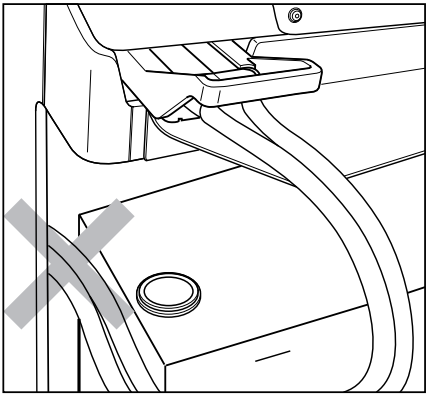

The lock must audibly engage. Push the release lever down if necessary. If the battery frame is locked incorrectly, traction is reduced and the message **A3405** is shown on the display and operating unit. This status can also be caused by the use of a non-standard battery or by a technical fault.

If the battery is not included in the scope of delivery of the truck, the battery lock must be adjusted by the authorised service centre.

- Check or re-enter the battery data (battery type and battery capacity) on the display and operating unit; see the chapter entitled "Setting the battery data".

Setting the battery data (lead acid batteries)

NOTE

The battery data only needs to be set via the display for lead acid batteries.

Adjustment instructions

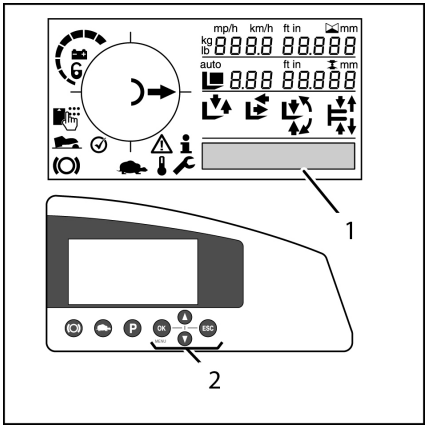

To enable the truck controller to determine the residual capacity of the battery correctly, the technical data for the installed battery must be entered using the following buttons on the display:

– Push the "OK" button on the keypad (2) for approx. 2 seconds. This calls up the onboard diagnostics function.

– The display (1) provides information on the selected menu item.

– Push the arrow buttons on the keypad (2) to scroll within the menus. The selected menu items are highlighted on the display.

The following menu items are available:

- **Information**
- **Parameter**
- **Diagnosis**

NOTE

*The height preselection option also offers the **Teach in** menu item.*

– Select the **Parameter** menu.

– Push the "OK" button on the keypad (2) to confirm the selection.

The correct battery type **(batt_type)** and capacity **(batt_cap)** for the installed battery can now be selected from the six options by entering the number that represents the capacity value.

Value	Battery type
0	Lead–acid battery (wet battery)
1	Performance-enhanced battery
2	Gel battery
3	Special battery/reserve
4	Special battery/reserve
5	Special battery/reserve

– Push the arrow buttons on the keypad (2) to select. Once the correct value is set,

confirm by pushing the "OK" button on the keypad (2).

– The capacity is read from the nameplate on the battery and is input as a column of numbers. The numbers are selected using the arrow buttons on the keypad (2). Confirm that each number in the column is set correctly by pushing the "OK" button on the keypad (2). Exit the settings by pushing the "ESC" button on the keypad (2) for approx. 2 seconds.

Transporting the battery using a lifting device (lead acid batteries)

▷

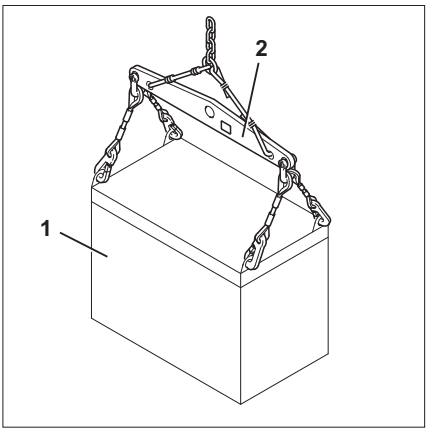

DANGER

Risk of fatal injury from falling load

– Never walk or stand underneath suspended loads.
– Determine the weight of the battery (battery identification plate). Note the load capacity of the lifting device.
– Always lift the battery with suitable lifting gear (bridge piece).
– Do not use the methods described here to transport the battery over long distances.

When removing and inserting the battery using a lifting device, always ensure that no one is standing directly next to the battery or between the battery and the lifting device.

WARNING

Risk of crushing/shearing!

The battery must be transported very carefully, i.e. at low speed, using slow steering movement and careful braking.

– Before transporting the battery, determine the weight of the battery (battery identification plate). Note the load capacity of the lifting device.
– To prevent the raised battery from damaging the truck, park the truck at a sufficient distance from any obstacles.

Replacing and transporting the battery

Transportation must always be carried out using lifting gear that is suitable in terms of its size and load capacity, in conjunction with a bridge piece (2).

- To avoid short circuits, use a rubber mat to cover batteries with open terminals or connectors.
- Using suitable lifting gear, hook the battery (1) onto a bridge piece (2). Follow the operating instructions for the lifting gear.

To prevent the battery tray being compressed, the lifting gear must lift vertically.

- Slowly and using a vertical movement, lift the battery out of the battery frame or insert it into the battery frame. Ensure that there is sufficient distance from the lift mast and from the chassis of the truck. Avoid any oscillating motions.
- Transport the battery to the intended storage space.

⚠ CAUTION

Risk of damage!

The battery must be stored on a suitable beam support or on suitable racking.

The battery must not be stored on a wooden beam or any similar object.

- Set the battery down carefully.
- Do not place or allow slack lifting gear to fall on the battery cells.

Transporting the battery using a lifting device (lithium-ion batteries)

DANGER

Risk of fatal injury from falling load

- Never walk or stand below suspended loads.
- Determine the weight of the battery (battery identification plate). Note the load capacity of the lifting device.
- Always lift the battery with suitable lifting gear (bridge piece).
- Do not use the methods described here to transport the battery over long distances.

When removing and inserting the battery using a lifting device, always ensure that no one is standing directly next to the battery or between the battery and the lifting device.

WARNING

Risk of crushing/shearing!

The battery must be transported very carefully, i.e. at low speed, using slow steering movement and careful braking.

- Before transporting the battery, determine the weight of the battery (battery identification plate). Note the load capacity of the lifting device.
- To prevent the raised battery from damaging the truck, park the truck at a sufficient distance from any obstacles.

Transportation must always be carried out using lifting gear that is suitable in terms of its size and load capacity, in conjunction with a bridge piece (2).

The lithium-ion battery (1) is equipped with four extendible lifting eyes.

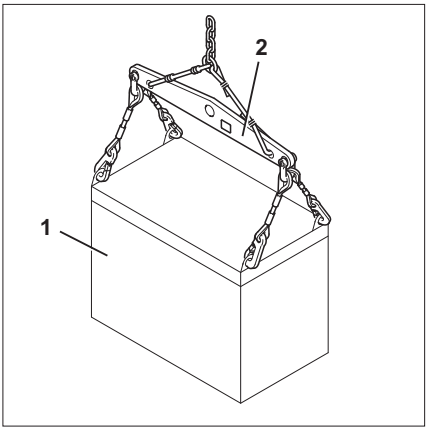

– Pull out the two lifting eyes (3) on each side and tilt them towards each other. The lifting eyes are locked in this position. ▷

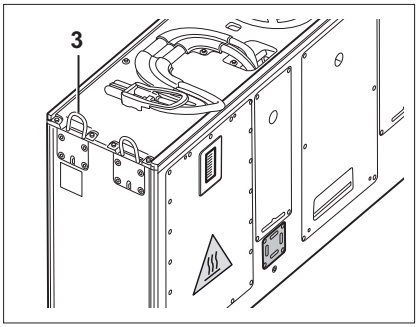

Check the lifting eyes for damage (e.g. deformation, corrosion). The battery must only be lifted using undamaged lifting eyes.

NOTE

*Do **not** straighten any bent lifting eyes; have them replaced by the authorised service centre.*

– Hook the lifting gear onto the four lifting eyes. Follow the operating instructions for the lifting gear.

To prevent the battery tray being compressed, the lifting gear must lift vertically.

– Slowly and using a vertical movement, lift the battery out of the battery frame or insert it into the battery frame. Ensure that there is sufficient distance from the lift mast and from the chassis of the truck. Avoid any oscillating motions.

– Transport the battery to the intended storage space.

CAUTION

Risk of damage!

The battery must be stored on a suitable beam support or on suitable racking.

The battery must not be stored on a wooden beam or any similar object.

– Set the battery down carefully.

– After setting down the battery, remove the lifting gear and the lifting eyes by pulling them upwards and releasing.

Cleaning the truck

Cleaning the truck

– Park the truck securely.

⚠ CAUTION

Risk of component damage!

If you remove the battery male connector when the key switch is switched on (under load), an arc will be produced. This can lead to erosion at the contacts, which considerably shortens their service life.

- Switch off the key switch before the battery male connector is disconnected
- Do not disconnect the battery male connector while the key switch is switched on, except in an emergency

- Disconnect the battery male connector

⚠ WARNING

There is a risk of injury due to falling when climbing onto the truck!

When climbing onto the truck, it is possible to get stuck or slip on components and fall. Higher points on the truck must only be accessed using the appropriate equipment.

- Adhere strictly to the following steps

- Use only the steps provided for this purpose to climb onto the truck.
- Use equipment such as stepladders or platforms to reach inaccessible areas

⚠ CAUTION

If water penetrates the electrical system, there is a risk of a short circuit occurring!

- Adhere strictly to the following steps

- Do not clean the battery, electric motors and other electrical components or their covers with a high-pressure cleaner or spray these components with water.

⚠ CAUTION

Excessive water pressure or water and steam that are too hot can damage truck components.

- Adhere strictly to the following steps

- Only use high-pressure cleaners with a maximum output power of 50 bar and at a maximum temperature of 85°C.
- When using high-pressure cleaners, make sure that there is a distance of at least

20 cm between the nozzle and the object being cleaned. Do not use high-pressure cleaners on the battery, electric motors and other electrical components or their covers.

– Do not aim the cleaning jet directly at adhesive labels or decal information.

DANGER

Risk of fire!

Deposits/accumulations of combustible materials may ignite in the vicinity of hot components (e.g. drive units).

– Adhere strictly to the following steps

– Regularly remove all deposits/accumulations of foreign materials in the vicinity of hot components.

DANGER

Flammable fluids can be ignited by hot components on the truck, causing a risk of fire!

– Adhere strictly to the following steps

– Do not use flammable fluids for cleaning.

– Observe the manufacturer's guidelines for working with cleaning materials.

CAUTION

Abrasive cleaning materials can damage the surfaces of components!

Using abrasive cleaning materials that are unsuitable for plastics may dissolve plastic parts or make them brittle. The screen on the display and operating unit may become cloudy.

– Adhere strictly to the following steps

– Clean plastic parts only with cleaning materials intended for plastic parts.

– Observe the manufacturer's guidelines for working with cleaning materials.

Cleaning the outside of the truck

– Clean the truck exterior using water-soluble cleaning materials and water (with a sponge or cloth).

– Clean all accessible areas, the oil filling openings and their surroundings, and clean the lubricating nipples before lubricating

NOTE

The more often the truck is cleaned, the more frequently it must be lubricated.

Cleaning the electrical system

WARNING

Danger of electric shocks due to residual capacity!

– Never reach into the electrical system with your bare hands.

CAUTION

Cleaning electrical system parts with water can damage the electrical system.

Cleaning electrical system parts with water is forbidden!

– Do not remove covers etc.
– Only use dry cleaning materials according to the specifications in the section "Cleaning the truck".

The components of the electrical system are fitted underneath the cover sheet of the counterweight etc.

– Clean the electrical system parts with a metal-free brush and blow the dust off with low-pressure compressed air.

Cleaning load chains

▷

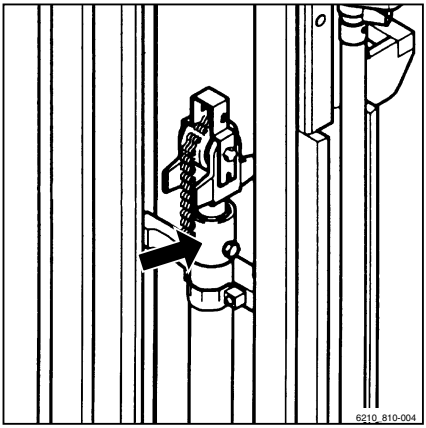

⚠ WARNING

Risk of accident!

Load chains are safety elements.

The use of cold cleaning solvents, chemical cleaners or fluids that are corrosive or contain acid or chlorine can damage the chains; use of these items is forbidden!

– Observe the manufacturer's guidelines for working with cleaning materials

– Place a collection vessel under the lift mast

– Clean using paraffin derivatives, such as benzine

– When using a steam jet, do not use additional cleaning agents.

– Remove any water in the chain links using compressed air immediately after cleaning. Move the chain several times during this procedure.

– Immediately after drying the chain, spray it with chain spray. Move the chain several times during this procedure.

For chain spray specifications, refer to the chapter entitled "Maintenance data table".

ENVIRONMENT NOTE

Dispose of any fluid that has been spilled or collected in the collection vessel in an environmentally friendly manner. Follow the statutory regulations.

Cleaning panes of glass and mirrors

Any panes of glass and mirrors, e.g. in the cab (variant), must always be kept clean and free of ice. This is the only means of guaranteeing good visibility.

⚠ CAUTION

Do not damage the rear window heating (inside).

– Take great care when cleaning the rear window (1) and do not use any objects with sharp edges.

– Clean the panes of glass and mirrors.

NOTE

Cleaning can be performed using a commercially available glass cleaner.

After cleaning

- Carefully dry the truck (e.g. with compressed air).
- Sit on the driver's seat and start the truck in line with applicable regulations. ▷

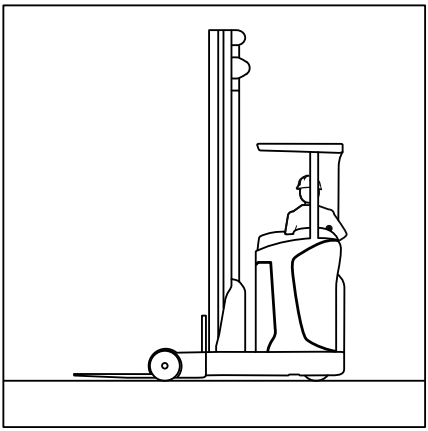

CAUTION

Risk of short circuit!

- If any moisture has penetrated the battery male connector despite the precautionary measures taken, first dry the battery male connector using compressed air.

Transporting the truck

Transportation

CAUTION

Risk of material damage from overloading!

The load capacity/lifting capacity of the means of transport, the ramps and the loading bridges must be greater than the actual total weight of the truck. Components can be permanently deformed or damaged due to overloading.

- Determine the total actual weight of the truck.
- Only load the truck if the load capacity of the means of transport, the ramps and loading bridges is greater than the total actual weight of the truck.

Determining the total actual weight

- Park the truck securely (refer to the chapter entitled "Parking the truck securely").
- Determine the unit weights by reading the truck nameplate and, if necessary, the attachment nameplate (variant).
- Add the determined unit weights to obtain the total actual weight of the truck:

  Tare weight (1)

  \+ Max. permissible battery weight (2)

  \+ Ballast weight (variant) (3)

  \+ Attachment net weight (variant)

  \+ 100 kg allowance for driver

  = Total actual weight

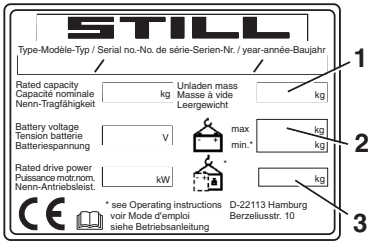

DANGER

Risk of accident from the truck crashing!

Steering movements can cause the tail end to veer off the loading bridge towards the edge. This may cause the truck to crash.

- Before driving across a loading bridge, ensure that the loading bridge is properly attached and secured.
- Ensure that the transport vehicle onto which the truck is to be driven has been sufficiently secured against moving.
- Maintain a safe distance from loading bridges, ramps, working platforms and similar objects.
- Drive slowly and carefully onto the transport vehicle.

Lashing trucks with an overhead guard

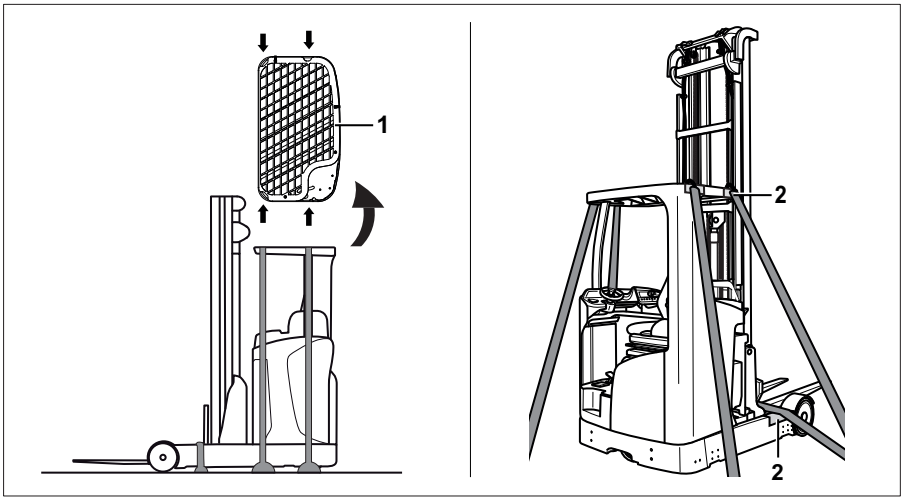

CAUTION

Abrasive lashing ropes may damage the surface of the truck.

– Position slip-resistant pads underneath the lifting points (e.g. rubber mats or foam).

DANGER

If the lashing ropes slip, the load can move!

The truck must be lashed securely so that it cannot move during transportation.

– Make sure that the lashing straps are tightened securely and that the pads cannot slip off.

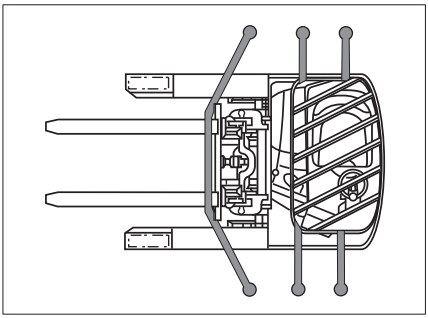

– Park the truck securely (refer to the chapter entitled "Parking the truck securely").

– Disassemble the overhead guard grille or roof panel (1) and prevent these components from being damaged.

– Position slip-resistant pads underneath the lifting points (2) (e.g. rubber mats or foam).

– Attach the lashing ropes in accordance with the illustration. Securely lash the truck.

– After the truck has been transported and the lashing ropes have been removed, reassemble the overhead guard grille or roof panel.

Lashing trucks with a cab

▷

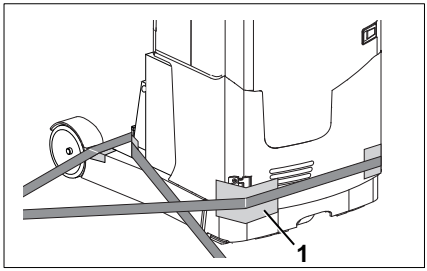

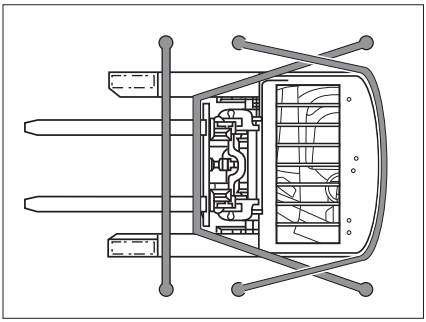

⚠ CAUTION

Abrasive lashing ropes may damage the surface of the truck.

– Position slip-resistant pads underneath the lashing ropes (e.g. rubber mats or foam).

⚠ DANGER

If the lashing ropes slip, the load can move!

The truck must be lashed securely so that it cannot move during transportation.

– Make sure that the lashing straps are tightened securely and that the pads cannot slip off.

– Park the truck securely (refer to the chapter entitled "Parking the truck securely").

– Position slip-resistant pads underneath the lifting points (1) (e.g. rubber mats or foam).

– Attach the lashing ropes in accordance with the illustration. Securely lash the truck.

Crane loading (standard truck with overhead guard)

Crane loading is only intended for transporting the complete truck for its initial commissioning. For application conditions that require frequent loading or that are not presented here, please contact the manufacturer with regard to particular variants.

Trucks may only be laden by persons with sufficient experience with the suitable harnesses and hoists.

Determining the loading weight

- Park the truck securely; refer to the chapter entitled "Parking the truck securely".
- Determine the unit weights by reading them off the truck nameplate and, if necessary, the attachment (variant) nameplate.
- Add the determined unit weights together to obtain the loading weight of the truck:

  Tare weight (1)

  \+ Max. permissible battery weight (2)

  \+ Ballast weight (variant) (3)

  \+ Attachment net weight (variant)

  = Loading weight

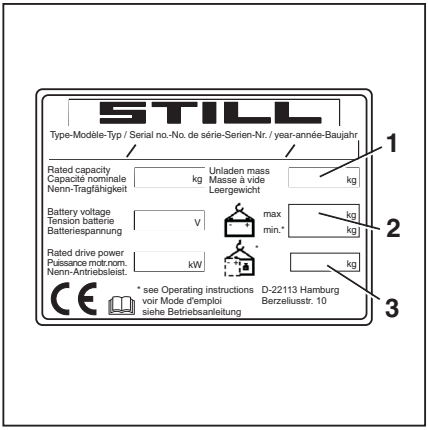

Hooking on the lifting straps

DANGER

There is a risk of being hit if the hoists and harnesses fail and cause the truck to fall, with potentially fatal consequences!

- Only use hoists and harnesses with sufficient load capacity for the total actual weight of the truck.
- Only use the truck's designated lifting points.
- Make sure that harness parts such as hooks, shackles, straps and similar items are only used in the indicated load direction.
- The harnesses must not be damaged by truck parts. Use suitable edge protection.

CAUTION

Harnesses may damage the truck's paintwork!

Harnesses may damage paintwork by rubbing and pressing on the surface of the truck. Particularly hard or sharp-edged harnesses, such as wires or chains, can quickly damage the surface.

- Use textile harnesses, e.g. lifting straps, with edge protectors or similar protective devices where necessary.

- Retract the reach carriage fully in the drive direction.
- Always use suitable edge protection between the hoist and any sharp edges on the truck to protect the hoist against damage when lifting the truck.

Hooking on the lifting straps to a truck with a lift mast

- Loop the lifting strap around the main traverse (1) on the outer mast of the lift mast and guide the lifting strap upwards
- Loop the lifting straps around the two posts of the overhead guard (2), (3) and guide them upwards

Hooking on the lifting straps to a truck without a lift mast

- Attach two suitable shackles (4) in the upper mast bearings of the truck
- Guide the lifting strap upwards through the two shackles and through the struts of the overhead guard. Make sure that no

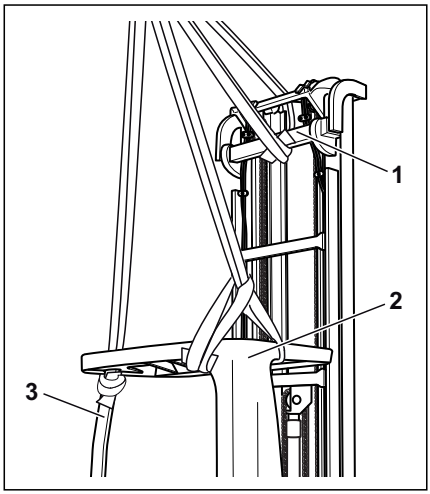

Hooking on the lifting straps to a truck with a lift mast

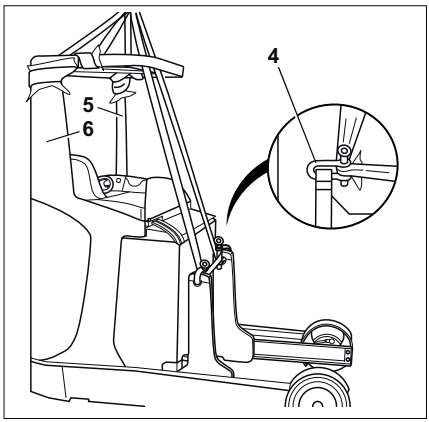

Hooking on the lifting straps to a truck without a lift mast

pressure can be exerted on the overhead guard by the lifting strap

- Guide the lifting straps upwards through the two shackles and through the struts of the overhead guard. Make sure that no pressure can be exerted on the overhead guard by the lifting strap Loop another lifting strap around the two posts of the overhead guard (5), (6) and guide the lifting strap upwards

– Adjust the length of the harnesses so that the lifting eye (7) is vertically above the truck's centre of gravity.

This ensures that the truck hangs level when lifting it.

– Connect the lifting straps to the lifting eye and insert the safety device (8).

⚠ CAUTION

Incorrectly fitted harnesses may damage attachment parts!

Pressure from the harnesses can damage or destroy attachment parts when the truck is lifted. If attachment parts are in the way (e.g. lighting etc.), these must be removed before loading. Ask your service centre about this.

– Secure harnesses in such a way that they do not touch any attachment parts.

▷

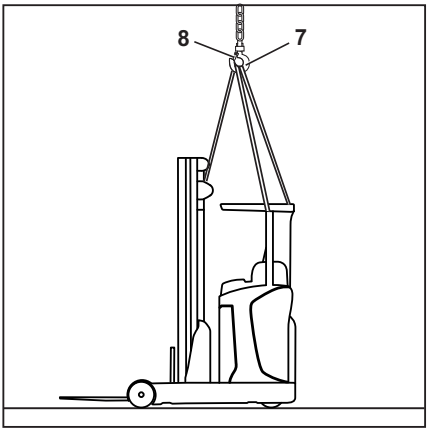

Loading the truck

⚠ DANGER

If the raised truck swings in an uncontrolled manner, it may crush people. There is a risk of fatal injury!

– Never walk or stand underneath suspended loads.

– Do not allow the truck to bump into anything whilst it is being lifted, or allow it to move in an uncontrolled manner.

– If necessary, hold the truck using guide ropes.

– Carefully lift the truck and take care when setting it down at the intended location.

Crane loading (trucks with a cab)

Crane loading is only intended for transporting the complete truck for its initial commissioning.

– For application conditions that require frequent crane loading or that are not described here, contact the authorised service centre.

Trucks may only be loaded by persons with sufficient experience with the suitable harnesses and hoists.

A bridge piece must be used when crane loading a truck with a cab. The dimensions and load capacity of the bridge piece must be suitable for the truck.

– If you have any questions relating to the suitability of the bridge piece, contact the authorised service centre.

Determining the loading weight

▷

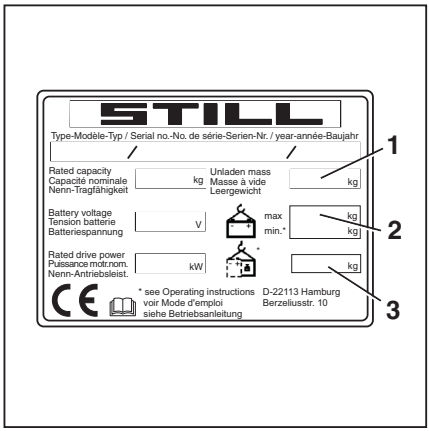

- Park the truck securely (refer to the chapter entitled "Parking the truck securely".
- Determine the unit weights by reading them off the truck nameplate and, if necessary, the attachment nameplate (variant).
- Add the determined unit weights together to obtain the loading weight of the truck:

  Tare weight (1)

  \+ Max. permissible battery weight (2)

  \+ Ballast weight (variant) (3)

  \+ Net weight of attachment (variant)

  = Loading weight

Safety information for crane loading

DANGER

There is a risk of fatal injury if the hoists and harnesses fail and cause the truck to fall!

- Only use hoists and harnesses with sufficient load capacity for the determined loading weight.
- Only use the truck's designated lifting points.
- Make sure that harness parts such as hooks, shackles, straps and similar items are used only in the indicated load direction.
- The harnesses must not be damaged by truck parts. Use suitable edge protection.

CAUTION

Harnesses may damage the paintwork on the truck!

Harnesses may damage paintwork by rubbing and pressing on the surface of the truck. Particularly hard or sharp-edged harnesses, such as wire ropes or chains, can quickly damage the surface.

- Use textile harnesses, e.g. lifting straps, with edge protectors or similar protective devices where necessary.

CAUTION

Incorrectly fitted harnesses may damage attachment parts!

Pressure from the harnesses can damage or destroy attachment parts when the truck is lifted. Attachment parts that are in the way (e.g. lighting etc.) must be removed before crane loading commences. Ask your authorised service centre about this.

- Secure harnesses in such a way that they do not touch any attachment parts.

Hooking on the lifting straps

- Before hooking on the lifting straps, park the truck securely (refer to the chapter entitled "Parking the truck securely"). Make sure that the battery male connector is disconnected. Make sure that the emergency off switch is actuated.
- Always use suitable edge protection (1) between the hoist and sharp edges on the truck. The edge protection protects the hoist against damage when the truck is lifted.

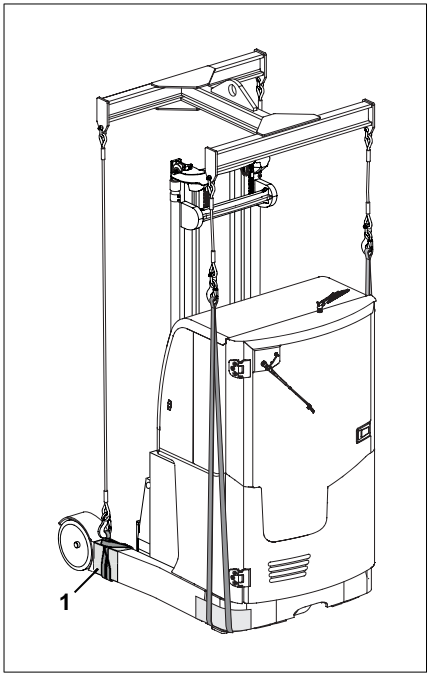

Hook on the lifting straps (load side, on the right/left)

- Loop the lifting straps around the load arms of the truck just behind the load wheels, as shown.

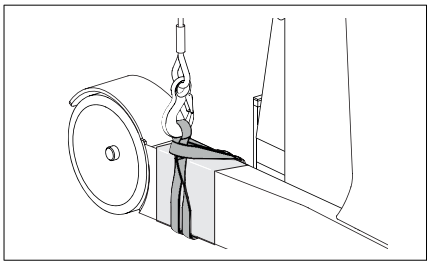

Hook on the lifting straps (drive side, on the right) ▷

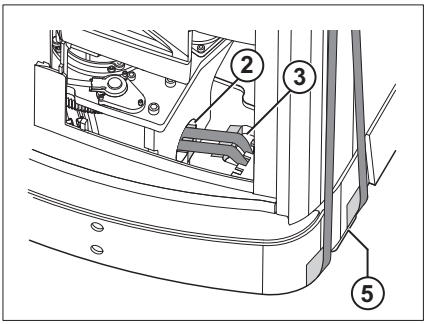

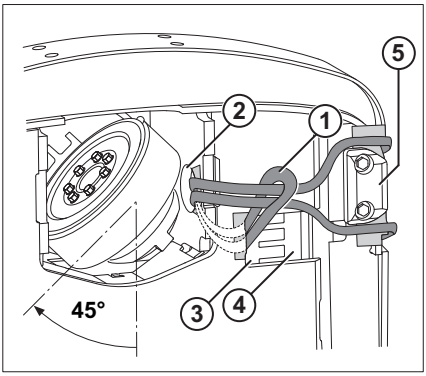

- If necessary, remove the engine cover below the driver's seat to make it easier to loop the strap around the strut on the floor of the truck chassis.
- If necessary, rotate the drive wheel into the 45° position to make it easier to loop the strap around the strut on the floor of the truck chassis. Before attaching the straps, make sure that the battery male connector is disconnected. Make sure that the emergency off switch is actuated.
- Guide the loop of the lifting strap (1) from below through the round opening (2) in the wheel arch.
- Guide the loop of the lifting strap downwards again through the rectangular opening (3) below the reach travel measurement system. Ensure that the straps do not put pressure on the teeth of the reach travel measurement system (4).
- Guide the loose ends of the lifting strap through the loop.
- Guide the loose ends of the lifting strap to the right and left of the side chassis support (5) and upwards towards the bridge piece.
- Hook the lifting straps onto the bridge piece and secure the straps in place.

Hook on the lifting straps (drive side, on the left) ▷

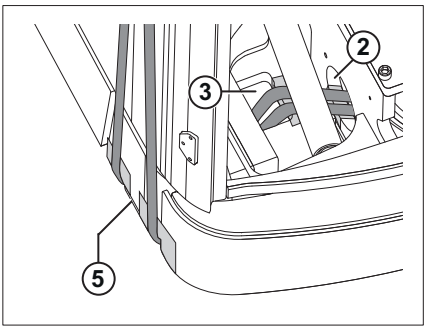

– If necessary, remove the bottom plate of the driver's compartment to make it easier to loop the strap around the strut on the floor of the truck chassis.

– If necessary, rotate the drive wheel into the 45° position to make it easier to loop the strap around the strut on the floor of the truck chassis. Before attaching the straps, make sure that the battery male connector is disconnected. Make sure that the emergency off switch is actuated.

– Guide the loop of the lifting strap (1) from below through the round opening (2) in the wheel arch.

– Guide the loop of the lifting strap downwards again under the reach cylinder and through the rectangular opening (3). Ensure that the belts do not put pressure on the reach cylinder (4).

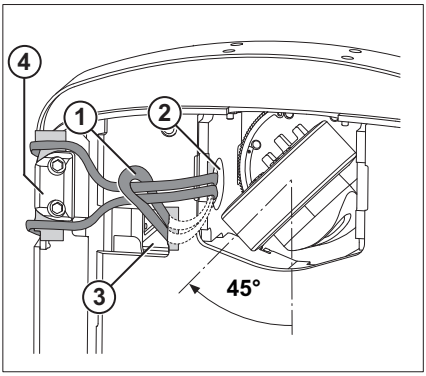

NOTE

The space under the reach cylinder for the lifting strap can be increased by extending the reach cylinder.

– Guide the loose ends of the lifting strap through the loop.

– Guide the loose ends of the lifting strap to the right and left of the side chassis support (5) and upwards towards the bridge piece.

– Hook the lifting straps onto the bridge piece and secure the straps in place.

Loading the truck

DANGER

If the raised truck swings in an uncontrolled manner, it may crush people. There is a risk of fatal injury!

- Never walk or stand underneath suspended loads.
- Do not allow the truck to bump into anything whilst it is being lifted, or allow it to move in an uncontrolled manner.
- If necessary, hold the truck using guide ropes.

- Adjust the length of the harnesses (1) so that the bridge piece is in a horizontal position.
- Adjust the length of the harnesses so that the bridge piece is vertically above the centre of gravity of the truck.

This ensures that the truck hangs level when it is being lifted.

- Insert the safety device for the lifting eye (2).
- Visually inspect all belts and pieces of edge protection to check that they are in the correct position.
- Carefully lift the truck. Carefully set down the truck at the intended location.

▷

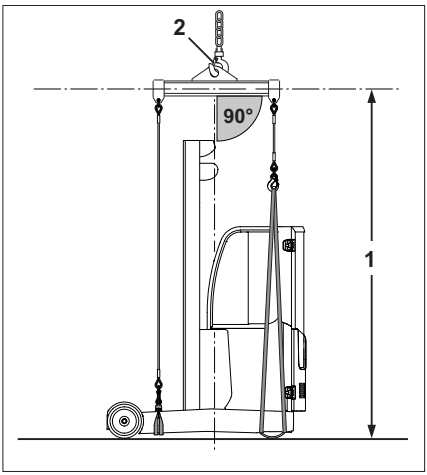

Decommissioning

Shutting down and storing the truck

⚠ CAUTION

Component damage due to incorrect storage!

Corrosion damage is possible in the event of incorrect storage or shutdown for more than 2 months. When the ambient temperature is below –10°C for an extended period the batteries cool down. The electrolyte may freeze and damage the batteries.

- Store the truck in a dry, clean, frost-free and well-ventilated environment.
- Implement the following measures before shutting down.

NOTE

Only store batteries that are fully charged.

Measures to be implemented before shutdown

- Clean the truck thoroughly.
- Fully extend and retract the reach carriage several times.
- Lift the fork carriage to the stop several times.
- Tilt the lift mast forwards and backwards several times. If an attachment is fitted, move the attachment several times.
- To relieve the strain on the load chains, lower the fork onto a suitable supporting surface, e.g. a pallet.
- Park the truck with all pistons and cylinders fully retracted.
- Apply oil or grease thinly to all uncoated moving parts.
- Grease the truck.
- Lubricate the joints and controls.
- Lubricate the battery lock.
- Fully charge the lead acid battery. Check the condition and acid density of the battery. Maintain the battery (observe the guidelines

from the battery manufacturer). Disconnect the battery male connector.

– Disconnect the battery male connector.

– Fully charge the lithium-ion battery (variant) (follow the battery manufacturer's operating instructions relating to storage). Disconnect the battery male connector.

– Spray all exposed electrical contacts with a suitable contact spray.

⚠ CAUTION

Risk of tyre deformation as a result of continuous strain on one side!

Jack up the truck so that all wheels are off the ground. This prevents permanent deformation of the tyres.

– Raise and jack up the truck.

⚠ CAUTION

Danger of damage from corrosion due to condensation on the truck!

Many plastic films and synthetic materials are watertight. Condensation water on the truck cannot escape through these covers.

– Do not use plastic film as this facilitates the formation of condensation water.

– Cover with vapour-permeable material, e.g. cotton.

– Cover the truck to protect it against dust.

If the truck is to be decommissioned for an extended period, contact the authorised service centre to find out about additional measures necessary.

Re-commissioning after shutdown

If the truck has been decommissioned for longer than 6 months, it must be carefully checked before being used again. As with the annual safety inspection, this check should also include all safety-related aspects of the truck.

– Clean the truck thoroughly.

– Grease the truck.

– Lubricate the joints and controls.

- Check the battery condition and acid density, and recharge if necessary.
- Check the hydraulic oil for condensation water and replace if necessary.
- Carry out checks and operations before the first commissioning.
- Change the brake fluid.
- Put the truck into operation.

During commissioning, the following must be checked in particular:

- Drive, controller, steering
- Brakes (service brake, parking brake)
- Reach carriage (extension function, retraction function)
- Lifting system (lifting accessories, load chains, mounting)

NOTE

For further information, see the workshop manual for the truck or contact the authorised service centre.

5

Maintenance

Safety regulations for maintenance

General information

To prevent accidents during maintenance and repair work, all necessary safety measures must be taken, e.g.:

- Apply the parking brake.
- Turn off the key switch and remove the key.
- Disconnect the battery male connector.
- Ensure that the truck cannot move unintentionally or start up inadvertently.
- If required, have the truck jacked up by the authorised service centre.
- Have the raised fork carriage or the extended lift mast secured against accidental lowering by the authorised service centre.
- Insert an appropriately sized wooden beam as an abutment between the lift mast and the cab, and secure the lift mast to prevent it tilting backwards unintentionally.
- Observe the maximum lift height of the lift mast, and compare the dimensions from the technical data with the dimensions of the hall into which the truck is to be driven. These steps are taken to prevent a collision with the ceiling of the hall and to avoid any damage caused as a result.

Working on the hydraulic equipment

The hydraulic system must be depressurised prior to all work on the system.

Working on the electrical equipment

Work may only be performed on the electrical equipment of the truck when it is in a voltage-free state. Function checks, inspections and adjustments on energised parts must only be performed by trained and authorised persons, taking the necessary precautions into account. Rings, metal bracelets etc. must be removed before working on electric components.

To prevent damage to electronic systems with electronic components, such as an electronic driving regulator or lift control, these components must be removed from the truck prior to the start of electric welding.

Work on the electrical system (e.g. connecting a radio, additional headlights etc.) is only permitted with approval from the authorised service centre.

Safety devices

After maintenance and repair work, all safety devices must be reinstalled and tested for operational reliability.

Set values

The device-dependent set values must be observed when making repairs and when changing hydraulic and electrical components. These are listed in the appropriate sections.

Lifting and jacking up

⚠ DANGER

There is a risk to life if the truck tips over!

If not raised and jacked up properly, the truck may tip over and fall off. Only the hoists specified in the workshop manual for this truck are allowed and are tested for the necessary safety and load capacity.

- Only have the truck raised and jacked up by the authorised service centre.
- Only jack the truck up at the points specified in the workshop manual.

The truck must be raised and jacked up for various types of maintenance work. The authorised service centre must be informed that this is to take place. Safe handling of the truck and the corresponding hoists is described in the truck's workshop manual.

Working at the front of the truck

DANGER

Risk of accident!

If the lift mast or fork carriage is raised, no work may be performed on the lift mast or at the front of the truck unless the following safety measures are observed!

DANGER

Risk of accident!

– Use only chains with adequate lifting capacity to secure the particular lift mast.

CAUTION

Potential damage to the ceiling!

– Note the maximum lift height of the lift mast.

Removing the lift mast

▷

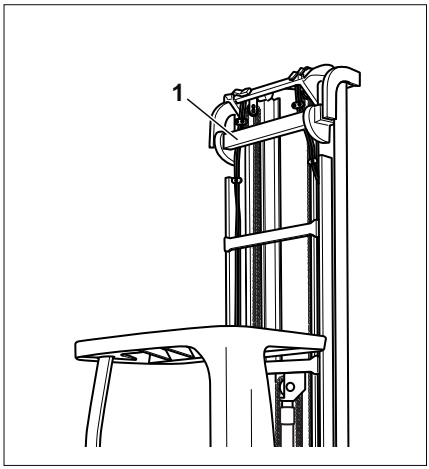

DANGER

Risk of accident!

– Attach the lifting gear to the top of the bridge piece (1) on the outer mast of the lift mast.

This work must only be performed by a service technician.

Securing the telescopic lift mast

▷

- Extend the lift mast.
- Route the chain over the cross beam of the outer mast (1) and under the cross beam of the inner mast (2).
- Lower the inner mast until it strikes the chain.

NOTE

Extend the lift mast to slacken the chain.

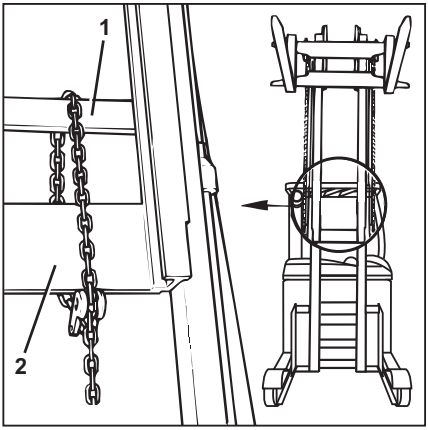

Securing the triple mast

▷

- Extend the lift mast.
- Route the chain over the cross beam of the outer mast (1) and under the cross beam of the middle mast (2).
- Lower the lift mast until it strikes the chain.
- Lower the fork carriage as far as it will go.

NOTE

Extend the lift mast to slacken the chain.

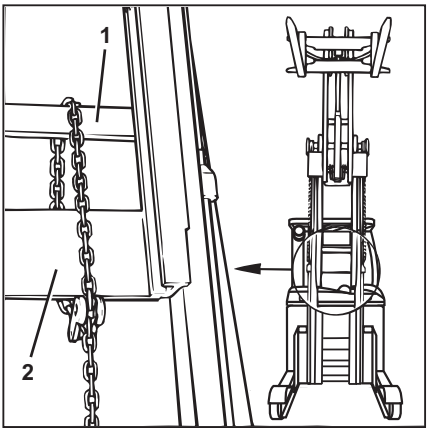

General maintenance information

Personnel qualifications

Only qualified and authorised personnel are allowed to perform maintenance work. The annual testing must be carried out by a qualified person. The examination and assessment by the qualified person must not be affected by operational and economic conditions and must be conducted solely from a safety perspective. The qualified person must have sufficient knowledge

and experience to be able to assess the condition of a truck and the effectiveness of the protective devices in accordance with technical conventions and the principles for testing trucks.

Maintenance personnel for batteries

Batteries may only be charged, maintained or changed by properly trained personnel in accordance with the instructions from the manufacturers of the battery, battery charger and truck. The handling instructions for the battery and the operating instructions for the battery charger must be followed.

Maintenance work without special qualifications

Simple maintenance work, such as checking the fluid level in the battery, may be carried out by untrained personnel. A qualification, like that of a specialist, is not required to carry out this work. The required operations are described in sufficient detail in the corresponding sections in these operating instructions.

Information for carrying out maintenance

This section contains all information required to determine when the truck needs maintenance. Maintenance must be carried out within the time limits according to the hour meter and by following the maintenance check lists. This is the only way to ensure that the truck remains ready for operation and provides optimal performance and service life. It is also a precondition for any warranty claims.

Maintenance timeframe

- The maintenance check lists indicate the maintenance work that is due.
- Carry out maintenance work on the truck based on the hour meter.

The intervals are defined for standard use. Shorter maintenance intervals can be defined in consultation with the operating company,

depending on the application conditions of the truck.

The following factors may necessitate shorter maintenance intervals:

- Dirty, poor quality roadways
- Dusty or salty air
- High levels of air humidity
- Extremely high or low ambient temperatures, or extreme changes in temperature
- Multi-shift operation with a high duty cycle
- Specific national regulations for the truck or individual components

Maintenance - 1000 hours/year

At operating hours										Carried out	
1000		2000		4000		5000		7000			
8000		10000		11000		13000		14000		✓	✗
Chassis, bodywork and fittings											
Examine the chassis, covers, support elements and mast mounting for cracks or damage (visual inspection)											
Check the overhead guard/cab and panes of glass for damage; check the visibility through the glass											
Check the controls, switches and joints for damage, and apply grease and oil											
Check the driver's seat, seat adjustment and protective covers for correct function and for damage											
Check the driver restraint system (option) for correct function and for damage, and clean											
Check the battery tray, lock and sensor for correct function and for damage											
Check the reach carriage guides, rollers and stops, and adjust if necessary											
Check the reach travel measuring system and limit stops											
Check the drive and brake actuations (single and dual pedal) for correct function and for damage Clean dust and dirt from the mechanisms											
Visually inspect the driver's compartment mounting on the battery side (for trucks built up to and including 05/2015; Service Information 512015009).											
Load wheels											
Check the wheels for damage, wear and ease of movement											
Check the wheel mountings for operating noise and play											
Tighten the wheel screws using a torque wrench (tightening torque: 195 Nm)											
Adjust the side chassis supports											
Drive wheel											
Check the drive wheel and tyres for damage and wear											
If necessary, replace the drive wheel											
Check the wheel screws and tightening torques											
Gearbox											
Perform a visual inspection for leak tightness, secure attachment and external damage. Check for operating noise.											
Check the gearbox oil level											
Traction motor, steering motor, pump motor											
Visual inspection for mounting and external damage. Check for operating noise. Clean the external fans. Functional test											

At operating hours										Carried out	
1000		2000		4000		5000		7000			
8000		10000		11000		13000		14000		✓	✗
Steering											
Check that the steering wheel is securely attached and check the turning handle for damage											
Check the steering column for the level of play											
Check the adjustment mechanism of the steering for functionality											
Check the function of the steering system											
Check the steering turntable bearing for ease of movement and wear											
Check the steering gears for play, and lubricate											
Hydraulic brake system											
Check the condition of all mechanical and hydraulic brake parts, check for correct function and clean											
Check the brake linings and replace if necessary											
Check the brake clearance											
Check the brake retardation values after each adjustment											
Check the brake fluid level											
If available, check switch for the brake fluid											
Perform brake test											
Electric parking brake											
Clean and check the rotor											
Check the brake clearance											
Check the brake retardation values											
Electrical system											
Check the function of the drive and pump controller for driving, acceleration, braking and reversing											
Check the cable connections and plug contacts for secure positioning and corrosion											
Check the electrostatic discharge (ESD) devices											
Check the main fuses and control fuses. Check the contacts of the main contactor											
Check the switch lock and emergency off switch for correct function.											
Check all operating and display functions (switches, transmitters)											
Check the lighting, indicator lights, instruments and seat contact switch											
Converters											

At operating hours										Carried out	
1000		2000		4000		5000		7000			
8000		10000		11000		13000		14000		✓	✗
Use air to blast dust from the surfaces											
Remove dirt and dust from the heat sinks											
Check the fans for correct function and for damage, and clean											
Lead acid battery and accessories											
Check the battery for damage and acid density; observe the manufacturer's maintenance instructions											
Check the battery male connector and cables for damage											
Perform insulation testing											
Measure the tray for short circuits											
Lithium-ion battery and accessories											
NOTE: Lithium-ion batteries are charged using high currents. Minor damage to the contact surfaces can therefore damage the battery plug. Replace the battery male connector in good time.											
Check the battery for damage; follow the manufacturer's maintenance instructions											
Check the battery male connector, contacts and cable for damage; replace if necessary.											
Check the battery male connector, contacts and cable on the battery charger for damage; replace if necessary.											
Perform insulation testing											
Hydraulic system											
Check the condition of the hydraulic system, check that it is working correctly, check for damage and check for leak tightness.											
Check the hydraulic pump for leak tightness											
Check the hydraulic oil level											
Check the oil filter (visual inspection, replace if contaminated)											
Test the oil tank for leak tightness											
Clean the breather filter and replace if necessary											
Lift mast											
Check the mast mounting for damage and check the tightening torques. For mast traversing, check and lubricate the sliding faces											
Check the mast profiles for damage and wear. Lubricate the mast profiles											
Check the load chains for damage and wear. Adjust and lubricate the load chains. Replace the main lift chains after 5000 operating hours (recommendation)											
Check the lift cylinders and connections for damage and check for leak tightness.											

At operating hours										Carried out	
1000		2000		4000		5000		7000			
8000		10000		11000		13000		14000		✓	✗
Check the guide pulleys for damage and wear											
Check the mast rollers and chain rollers for damage and wear											
Check the tilt cylinders and connections for damage and check for leak tightness.											
Check the joints of the tilt attachment for play and ease of movement											
Check the reach cylinders and connections for damage and check for leak tightness.											
Check the joints of the reach cylinder for play and ease of movement, and lubricate											
Check the fork carriage for damage and wear											
Check the fork height setting and adjust the chain length if necessary											
Check the fork arm interlock for damage and correct function											
Check the fork arms for wear and deformation											
Check that there is a safety screw on the fork carriage or on the attachment											
Check the hydraulic hoses, re-adjust, replace if necessary											
Lubricate the fork tilter/sideshift											
Special equipment											
Replace the filter mat for the heating system.											
Check the heating system for damage; observe the manufacturer's maintenance instructions											
Check the optical height measuring system (visual inspection), clean the sensor and reflector											
Check the attachments for wear and damage; observe the manufacturer's maintenance instructions											
Clean excessive dirt from the battery change frame and check the frame for deformation/damage. Check the freedom of movement of the rollers and keep the surface of the rollers free of corrosion by applying a film of oil.											
Lubricating											
Lubricate using approved lubricants in accordance with the lubrication plan											
General											
Check labelling to ensure it is complete											
Perform a test drive											
Read out and check the error numbers and delete list											
Reset the maintenance interval											

Maintenance - 3000 hours/every two years

At operating hours										Carried out	
3000		6000		9000		12000		15000		✓	✗
Note											
Perform all 1000-hour maintenance work											
Gearbox											
Oil change (gearbox)											
Lubricate the shaft stub gearing between the gearbox and traction motor											
Hydraulic brake system											
Changing the brake fluid											
Hydraulic system											
Change the hydraulic oil											
Replace the oil filter											

Additional maintenance guidelines for using the truck in a cold store - 500 hours or every 12 weeks

At operating hours										Carried out	
500		1000		1500		2000		2500			
3000		3500		4000		4500				✓	✗
Truck components											
Perform a function check of the entire truck, including all special equipment, special heating systems, switch-off thermostats etc.											
Check all important screw connections for secure attachment											
Check the condition and mounting of the wheels											
Check the function of the steering system											
Check the steering play; check the setting of the steering chain if necessary											
Perform a special function check of the brake assemblies											
Check the hydraulic system for leaks											
Check all rollers and wear strips in the lift mast for ease of movement											
Perform a visual inspection of chains and pinion gears, lubricate as required.											
Perform a visual inspection of the fork arms											
Check the ease of movement of the limit switches											

At operating hours										Carried out	
500		1000		1500		2000		2500			
3000		3500		4000		4500				✓	✖
Lubricating											
Lubricate using approved lubricants in accordance with the lubrication plan											
Lubricate the fork tilter/sideshift											
In addition, lubricate the lubricating nipple for the door hinges and the door closing mechanism every six weeks											

Ordering spare parts and wearing parts

Spare parts are provided by our spare parts service department. The information required for ordering parts can be found in the spare parts list.

Only use spare parts as per the manufacturer's instructions. The use of unapproved spare parts can result in an increased risk of accidents due to insufficient quality or incorrect assignment. Anyone using unapproved spare parts shall assume unlimited liability in the event of damage or harm.

Quality and quantity of the required operating materials

Only the operating materials specified in the maintenance data table may be used.

– The required consumables and lubricants can be found in the maintenance data table.

Oil and grease types of a different quality must not be mixed. This negatively affects the lubricity. If a change between different manufacturers cannot be avoided, drain the old oil thoroughly.

Before carrying out lubricating work, filter changes or any work on the hydraulic system, carefully clean the area around the part involved.

When topping up working materials, use only clean containers!

Maintenance data table

⚠ CAUTION

Risk of damage to property

Trucks for cold store operation must be lubricated using different lubricants; see the chapter entitled "Cold store application".

Unit	Additive/consumable	Specifications	Measurement
General lubrication points	Grease	STILL high pressure lubricating grease ID no. 0170761	As required
Battery	Distilled water	-	As required
Insulation resistance of the battery	-	DIN 43539 VDE 0510	For further information, refer to the workshop manual for the truck
Insulation resistance of the electrical system	-	DIN EN 1175 VDE 0117	For further information, refer to the workshop manual for the truck
Hydraulic system	Hydraulic oil	HVLP68 DIN 51524/P3 ID no. 0172025 (1 l) / 0172026 (5 l)	Tank volume approx. 25 l Level ex works depends on the type of lift mast fitted.
	Hydraulic oil (cold store variant)	Equivis XLT 15 ID no. 7327400007 (20 l)	
	Hydraulic oil (foodstuffs)	Food-grade oil in accordance with NSFH1 7327400020 (46 grade oil - 10 l) 7327400024 (68 grade oil - 10 l)	
Wheel nuts/screws			
- Drive wheel	Torque wrench	-	195 Nm
- Load wheel (slotted nut)	Torque wrench	-	120 Nm
Drive axle			
- Wheel gear	Gearbox oil	Castrol Alphasyn EP 150 ID no. 7326000022 (20 l)	Approx. 2.9 l
Lift mast			

Unit	Additive/consumable	Specifications	Measurement
Lift mast	Super-pressure adhesive lubricant	SKD 3400 ID no. 0147873	As required
Load chains	Chain lubrication	Fully synthetic Temperature range: -35°C to +250°C ID no. 0156428	As required
- Setting	Distance to support roller	-	35 mm under the top edge of the inner mast
Brake system			
- Container	Brake fluid	ATE SL DOT4 ID no. 7327500020 (1 l)	0.2 l
Steering			
Steering gears	Lubrication	Rivolta S.K.D. 4002	As required

Maintaining operational readiness

Checking the driver's seat

▷

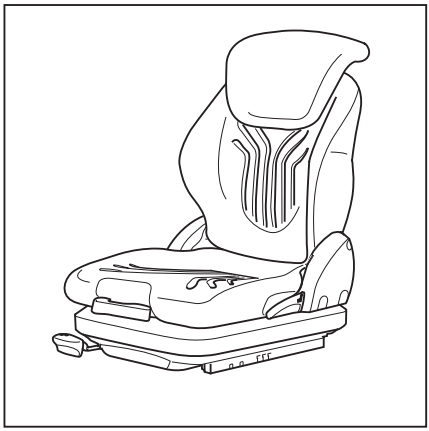

⚠ WARNING

Risk of injury!

– After an accident, check the driver's seat and the mounting.

– Check the operating devices for correct operation.

– Check the condition of the seat (e.g. wear on the upholstery) and check that the seat is securely mounted in the truck.

⚠ WARNING

Risk of injury!

– Have the seat repaired by the authorised service centre if you identify any damage during the checks.

Maintaining wheels and tyres

⚠ WARNING

Risk of accident!

Uneven wear reduces the stability of the truck and increases the braking distance.

– Worn or damaged tyres (left or right) must be replaced immediately.

⚠ WARNING

Risk of tipping!

Tyre quality affects the stability of the truck.

If you wish to use a different type of tyre on the truck from the tyres approved by the truck manufacturer, or tyres from a different manufacturer, you must first obtain approval from the truck manufacturer.

Checking the condition and wear of the tyres ▷

⚠ WARNING

Tyre quality affects the stability and handling of the truck.

Changes must only be made following consultation with the manufacturer.

When changing wheels or tyres, ensure that this does not cause the truck to tilt to one side (e.g. always replace right-hand and left-hand wheels at the same time).

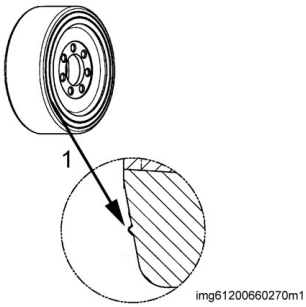

NOTE

The wear of the tyres must be approximately the same.

- *Polyurethane tyres can be worn down to the wear mark (3)*

The tyres must be replaced if:

- Large cracks have formed in the tread This can be detected by a "whirring sound" when driving
- The tread has broken away significantly
- The tyre diameter has reduced by approx. 9%

A wear mark (1) in the lateral flank of the lining serves as a visual indication of the wear limit.

Checking the wheel fastenings

– Check the wheel screws (drive wheel) and load wheel nuts (load wheel) are securely seated and tighten them as necessary.

– Comply with the specified torques; refer to the chapter entitled "Maintenance data table"

Checking the hydraulic system for leaks

⚠ WARNING

Hydraulic oil under pressure can escape from leaking lines and cause injuries to the skin.

Wear suitable protective gloves, industrial goggles etc.

⚠ WARNING

Hydraulic hoses become brittle over time!

Hydraulic hoses must not be used for a period longer than six years.

The BGR 237 specifications must be complied with. Differing national laws must be taken into account.

– Check pipe and hose connection screw joints for leaks (traces of oil)

Hose lines must be replaced if:

- The outer layer is damaged or becomes brittle and cracks begin to form
- They are leaking
- There are any unnatural deformations (e.g. bubble formation or buckling)
- A fitting is detached from the hose
- A fitting is heavily damaged or corroded

Pipes must be replaced if:

- There is abrasion and a loss of material
- There are any unnatural deformations and bending stress is detected
- They are leaking

– In the event of a loss of oil, contact the authorised service centre

Greasing the lift mast and roller tracks

- Remove dirt and lubricant residue from the roller tracks
- Lubricate the roller tracks (1) of the outer mast, middle mast and inner mast with a super-pressure adhesive lubricant to reduce wear; refer to the chapter entitled "Maintenance data table"

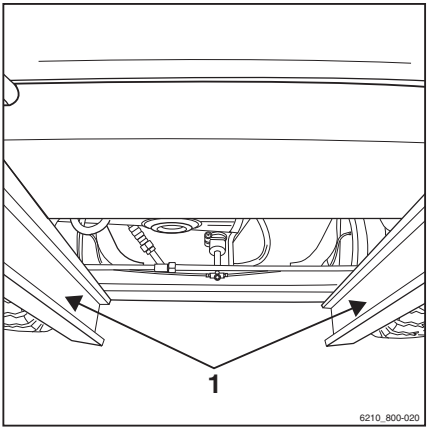

NOTE

Spray the tracks evenly from a distance of approx. 15 - 20 cm. Wait approx. 15 minutes until the device is ready for operation again.

Checking the battery change frame (variant)

The screw joints and welded seams of the battery change frame must be subjected to a visual inspection.

Replacing the heating system filter for the cab (variant)

The heating system filter is located in the door panelling beneath the window.

- Unscrew the screws (1) and remove the cover on the heating system.
- Completely remove the filter mat (2) from the filter housing.
- Check the filter mat for contamination and beat out.

NOTE

Replace the filter mat when it is clearly grey, but at least every two months.

- Remove any dirt that has collected in the filter housing and recirculated-air inlet.
- Re-insert the filter mat into the filter housing.
- Make sure that the filter mat sits correctly and accurately in the filter housing.
- Fit the heating system cover and secure using the screws.

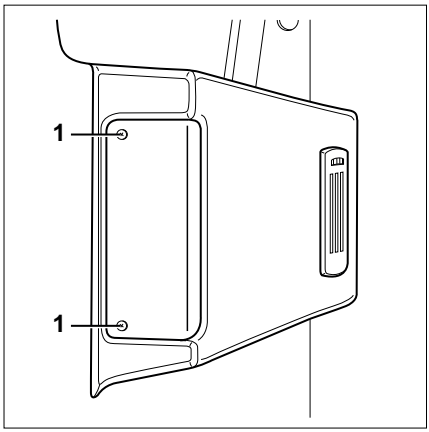

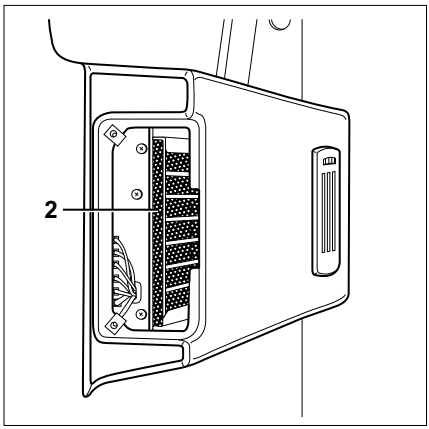

Maintenance for trucks used in cold stores

– On trucks used in cold stores (variant), check all rollers and chains in the lift mast for ease of movement once a week.

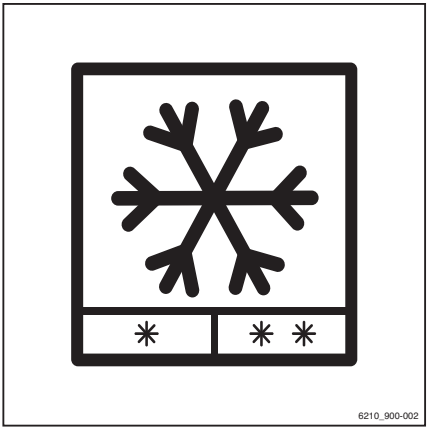

Maintenance tasks for lithium-ion batteries

NOTE

The lithium-ion battery is maintenance-free. However, a few tasks are required for maintenance of the battery and to ensure safe operation.

Regular tasks

- Cleaning the battery
- Checking the battery connections and cables
- Visually inspecting the covers
- Charging the battery

Every 3 months

- Fully charge the battery when the truck is located within or outside the area of the warehouse

6

Technical data

Dimensions

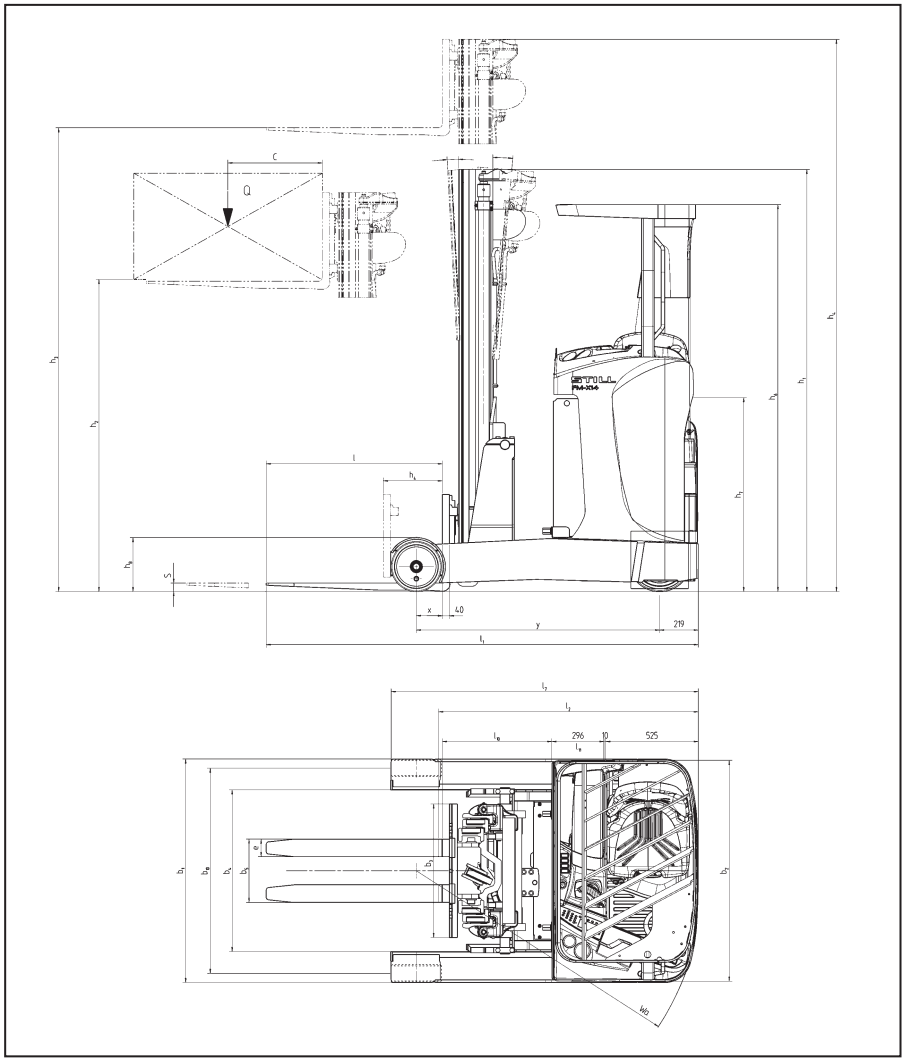

Measurements h_1, h_3, h_4, h_6 and b_1 are customised and can be taken from the order confirmation.

VDI datasheet for FM-X 10 / Li-ion (N), FM-X 12 / Li-ion (N)*

*Subject to change

This type sheet, in accordance with VDI directive 2198, states only the technical values of the standard device. Different tyres, lift masts, additional units etc. may produce different values.

All dimensions include the mast traversing device or fork sideshifter

Legend

1 For larger batteries, decreases by 72 mm for each battery size on the FM-X, FM-X W, FM-X EW models. For larger batteries, decreases by 90 mm for each battery size on the FM-X N model

2 Aisle width for a 1000 x 1200 pallet, crosswise:

- For larger batteries, increases by 56 mm for each battery size on the FM-X, FM-X W, FM-X EW models
- For larger batteries, increases by 74 mm for each battery size on the FM-X N model Aisle width for a 800 x 1200 pallet, lengthwise:
- For larger batteries, increases by 66 mm for each battery size on the FM-X, FM-X W, FM-X EW models
- For larger batteries, increases by 85 mm for each battery size on the FM-X N model

3 Depending on the lift mast, with sideshift/fork tilt: 2°/4°

4 When the cab/weather protection option is selected, the height h6 is 2180 mm

5 When the cab option is selected, the length increases by 150 mm

6 For larger batteries, increases by 72 mm for each battery size on the FM-X, FM-X W, FM-X EW models. For larger batteries, increases by 90 mm for each battery size on the FM-X N model

Characteristics

				FM-X 10 / Li-ion	FM-X 10 N	FM-X 12 / Li-ion	FM-X 12 N
1.1	Manufacturer			STILL	STILL	STILL	STILL
1.2	Manufacturer's type designation			FM-X 10 / Li-ion	FM-X 10 N	FM-X 12 / Li-ion	FM-X 12 N
1.3	Drive			Electric	Electric	Electric	Electric
1.4	Operation			Seating device	Seating device	Seating device	Seating device
1.5	Load capacity/load	Q	kg	1000	1000	1200	1200
1.6	Load centre of gravity	c	mm	600	600	600	600

VDI datasheet for FM-X 10 / Li-ion (N), FM-X 12 / Li-ion (N)*

				FM-X 10 / Li-ion	FM-X 10 N	FM-X 12 / Li-ion	FM-X 12 N
1.8	Load distance 1	x	mm	278	184	278	184
1.9	Wheelbase	y	mm	1275	1275	1275	1275

Weights

				FM-X 10 / Li-ion	FM-X 10 N	FM-X 12 / Li-ion	FM-X 12 N
2.1	Net weight (including battery)		kg	3230	3200	3240	3210
2.3	Axle load without front/rear load		kg	2040/1190	1970/1230	2130/1100	1970/1230
2.4	Axle load with fork forwards with front/rear load		kg	960/3270	920/3280	850/3580	920/3280
2.5	Front/rear axle load, fork backwards, with load		kg	1730/2500	1590/2610	1820/2610	1590/2610

Wheels, chassis frame

				FM-X 10 / Li-ion	FM-X 10 N	FM-X 12 / Li-ion	FM-X 12 N
3.1	Tyres			Polyureth.	Polyureth.	Polyureth.	Polyureth.
3.2	Front tyre size		mm	∅ 360 x 130	∅ 360 x 130	∅ 360 x 130	∅ 360 x 130
3.3	Rear tyre size		mm	∅ 285 x 100	∅ 285 x 100	∅ 285 x 100	∅ 285 x 100
3.5	Number of wheels (x = driven), front/rear			1x/2	1x/2	1x/2	1x/2
3.7	Rear track width	b_{11}	mm	1167	1037	1167	1037

Basic dimensions

				FM-X 10 / Li-ion	FM-X 10 N	FM-X 12 / Li-ion	FM-X 12 N
4.1	Lift mast/fork carriage tilt, forwards/backwards 3	α/β	°	1/3	2/4	1/3	2/4
4.2	Height with lift mast retracted	h_1	mm	2450	2450	2450	2450
4.3	Free lift	h_2	mm	1890	1890	1890	1890
4.4	Lift	h_3	mm	5750	5750	5750	5750
4.5	Height with lift mast extended	h_4	mm	6310	6310	6310	6310

				FM-X 10 / Li-ion	FM-X 10 N	FM-X 12 / Li-ion	FM-X 12 N
4.7	Height of overhead guard (cab) 4	h_6	mm	2200	2200	2200	2200
4.8	Seat height	h_7	mm	1140	1140	1140	1140
4.10	Height of load wheel supports	h_8	mm	308	308	308	308
4.19	Total length 2, 5, 6	l_1	mm	2366	2462	2366	2462
4.20	Length including fork back 2, 5, 6	l_2	mm	1216	1312	1216	1312
4.21	Total width	b_1/b_2	mm	1270	1140	1270	1140
4.22	Fork arm dimensions, DIN ISO 2331	s/e/l	mm	40/ 80/ 1150	40/ 80/ 1150	40/ 100/ 1150	40/ 100/ 1150
4.23	Fork carriage to ISO 2328, class/model A, B			2/A	2/A	2/A	2/A
4.24	Fork carriage width	b_3	mm	760	760	760	760
4.25	Width across forks, min./max.	b_5	mm	296/600	296/600	296/600	296/600
4.26	Width between load wheel supports	b_4	mm	920	790	920	790
4.28	Reach forward 1	l_4	mm	449	364	449	364
4.31	Ground clearance with load under lift mast	m_1	mm	70	70	70	70
4.32	Ground clearance at centre of wheelbase	m_2	mm	70	70	70	70
4.34 .1	Aisle width for a 1000 x 1200 pallet, crosswise 2	A_{st}	mm	2679	2733	2679	2733
4.34 .2	Aisle width for a 800 x 1200 pallet, lengthwise 2	A_{st}	mm	2746	2812	2746	2812
4.35	Turning radius	W_a	mm	1540	1520	1540	1520
4.37	Length across the load wheel supports	l_7	mm	1639	1641	1639	1641
4.43	Step height		mm	345	345	345	345

Performance data

				FM-X 10 / Li-ion	FM-X 10 N	FM-X 12 / Li-ion	FM-X 12 N
5.1	Driving speed with/without load		km/h	14/14	14/14	14/14	14/14
5.1.1	Reverse driving speed with/without load		km/h	14/14	14/14	14/14	14/14
5.2	Lifting speed with/without load		m/s	0.47/0.70	0.47/0.70	0.47/0.70	0.47/0.70

VDI datasheet for FM-X 10 / Li-ion (N), FM-X 12 / Li-ion (N)*

				FM-X 10 / Li-ion	FM-X 10 N	FM-X 12 / Li-ion	FM-X 12 N
5.3	Lowering speed with/without load		m/s	0.56/0.50	0.56/0.50	0.56/0.50	0.56/0.50
5.4	Reach speed with/without load		m/s	0.18	0.18	0.18	0.18
5.7	Climbing capability with/without load		%	10/15	10/15	10/15	10/15
5.8	Max. climbing capability with/without load		%	15/20	15/20	15/20	15/20
5.9	Acceleration time (over 10 m with/without load)		s	4.5/4.0	4.5/4.0	4.5/4.0	4.5/4.0
5.10	Service brake			Regenera-tive, elec-trical/ hy-draulic	Regen-erative, electrical/ hydraulic	Regen-erative, electrical/ hydraulic	Regen-erative, electrical/ hydraulic

Electric motor

				FM-X 10 / Li-ion	FM-X 10 N	FM-X 12 / Li-ion	FM-X 12 N
6.1	Traction motor, power rating at S2 = 60 min		kW	6.5	6.5	6.5	6.5
6.2	Lift motor, power rating at S3 = 15%		kW	14	13	14	14
6.3	Battery in accordance with DIN 43531/35/36 A, B, C, no			43531 C/254-2	43531 B/254-2	43531 C/254-2	43531 B/254-2
6.4	Battery voltage/nominal capacity K_5		V/Ah	48/465, Li-ion: 48/204	48/465	48/465, Li-ion: 48/204	48/465
6.5	Battery weight (±5% depending on the manufacturer)		kg	750	750	750	750
6.6	Energy consumption in accordance with VDI cycle		kWh/h	2.88	2.88	3.23	3.23

Other

				FM-X 10 / Li-ion	FM-X 10 N	FM-X 12 / Li-ion	FM-X 12 N
10.1	Working pressure for attachment		bar	200	200	200	200
10.2	Oil flow for attachments		l/min	20	20	20	20
10.7	Sound pressure level in driver's compartment		dB(A)	69	69	69	69

VDI datasheet for FM-X 14 / Li-ion (N, W, EW)*

* Subject to change

All dimensions include the mast sideshift or fork sideshifter

1 For larger batteries, decreases by 72 mm for each battery size on the FM-X, FM-X W, FM-X EW models. For larger batteries, decreases by 90 mm for each battery size on the FM-X N model

2 Aisle width for a 1000 x 1200 pallet, crosswise:

- For larger batteries, increases by 56 mm for each battery size on the FM-X, FM-X W, FM-X EW models
- For larger batteries, increases by 74 mm for each battery size on the FM-X N model Aisle width for a 800 x 1200 pallet, lengthwise:
- For larger batteries, increases by 66 mm for each battery size on the FM-X, FM-X W, FM-X EW models
- For larger batteries, increases by 85 mm for each battery size on the FM-X N model

3 Depending on the lift mast, with sideshift/fork tilt: 2°/4°

4 When the cab/weather protection option is selected, the height h6 is 2180 mm

5 When the cab option is selected, the length increases by 150 mm

6 For larger batteries, increases by 72 mm for each battery size on the FM-X, FM-X W, FM-X EW models. For larger batteries, increases by 90 mm for each battery size on the FM-X N model

Key data

				FM-X 14 / Li-ion	FM-X 14 N	FM-X 14 W / Li-ion	FM-X 14 EW / Li-ion
1.1	Manufacturer			STILL	STILL	STILL	STILL
1.2	Manufacturer's type designation			FM-X 14 / Li-ion	FM-X 14 N	FM-X 14 W / Li-ion	FM-X 14 EW / Li-ion
1.3	Drive			Electric	Electric	Electric	Electric
1.4	Operation			Seating device	Seating device	Seating device	Seating device
1.5	Load capacity/load	Q	kg	1400	1400	1400	1400
1.6	Load centre of gravity	c	mm	600	600	600	600
1.8	Load distance 1	x	mm	348	335	276	276
1.9	Wheelbase	y	mm	1381	1453	1381	1381

VDI datasheet for FM-X 14 / Li-ion (N, W, EW)*

Weights

				FM-X 14 / Li-ion	FM-X 14 N	FM-X 14 W / Li-ion	FM-X 14 EW / Li-ion
2.1	Net weight (including battery)		kg	3470	3430	3700	3750
2.3	Front/rear axle load without load		kg	2250/1220	2120/1310	2290/1410	2330/1420
2.4	Front/rear axle load, fork forwards, with load		kg	850/4010	860/3970	960/1410	1000/4150
2.5	Front/rear axle load, fork backwards, with load		kg	1950/2910	1770/3060	1920/3180	1960/3190

Wheels, chassis frame

				FM-X 14 / Li-ion	FM-X 14 N	FM-X 14 W / Li-ion	FM-X 14 EW N / Li-ion
3.1	Tyres			Polyureth-ane	Polyureth-ane	Polyuret-hane	Polyuret-hane
3.2	Front tyre size		mm	∅ 360 x 130	∅ 360 x 130	∅ 360 x 130	∅ 360 x 130
3.3	Rear tyre size		mm	∅ 285 x 100	∅ 285 x 100	∅ 285 x 100	∅ 285 x 100
3.5	Number of wheels (x = driven), front/rear			1x/2	1x/2	1x/2	1x/2
3.7	Rear track width	b_{11}	mm	1167	1037	1367	1567

Basic dimensions

				FM-X 14 / Li-ion	FM-X 14 N	FM-X 14 W / Li-ion	FM-X 14 EW / Li-ion
4.1	Lift mast/fork carriage tilt, forwards/backwards 3	α/β	°	1/3	2/4	1/3	1/3
4.2	Height with lift mast retracted	h_1	mm	2450	2450	2450	2450
4.3	Free lift	h_2	mm	1890	1890	1890	1890
4.4	Lift	h_3	mm	5750	5750	5750	5750
4.5	Height with lift mast extended	h_4	mm	6310	6310	6310	6310
4.7	Height of overhead guard (cab) 4	h_6	mm	2200	2200	2200	2200
4.8	Seat height	h_7	mm	1140	1140	1140	1140

				FM-X 14 / Li-ion	FM-X 14 N	FM-X 14 W / Li-ion	FM-X 14 EW / Li-ion
4.10	Height of load wheel supports	h_8	mm	308	308	308	308
4.19	Total length 2, 5, 6	l_1	mm	2402	2488	2474	2474
4.20	Length including fork back 2, 5, 6	l_2	mm	1252	1338	1324	1324
4.21	Overall width	b_1/b_2	mm	1270	1140	1470	1670
4.22	Fork arm dimensions, DIN ISO 2331	s/e/l	mm	40/ 100/ 1150	40/ 100/ 1150	40/ 100/ 1150	40/ 100/ 1150
4.23	Fork carriage to ISO 2328, class/model A, B			2/A	2/A	2/A	2/A
4.24	Fork carriage width	b_3	mm	760	760	760	760
4.25	Width over forks, min./max.	b_5	mm	316/620	316/620	316/620	316/620
4.26	Width between load wheel supports	b_4	mm	920	790	1120	1320
4.28	Reach forward 1	l4	mm	529	515	457	457
4.31	Ground clearance with load below lift mast	m_1	mm	70	70	70	70
4.32	Ground clearance at the centre of the wheelbase	m_2	mm	70	70	70	70
4.34.1	Aisle width for a 1000 x 1200 pallet, crosswise 2	A_{st}	mm	2727	2787	2821	2861
4.34.2	Aisle width for a 800 x 1200 pallet, lengthwise 2	A_{st}	mm	2782	2845	2887	2927
4.35	Turning radius	W_a	mm	1640	1691	1680	1720
4.37	Length across the load wheel supports	l_7	mm	1745	1817	1745	1745
4.43	Step height		mm	345	345	345	345

Performance data

				FM-X 14 / Li-ion	FM-X 14 N	FM-X 14 W / Li-ion	FM-X 14 EW / Li-ion
5.1	Driving speed with/without load		km/h	14/14	14/14	14/14	14/14
5.1.1	Reverse driving speed with/without load		km/h	14/14	14/14	14/14	14/14
5.2	Lifting speed with/without load		m/s	0.45/0.68	0.45/0.68	0.45/0.68	0.45/0.68
5.3	Lowering speed with/without load		m/s	0.56/0.52	0.56/0.52	0.56/0.52	0.56/0.52

VDI datasheet for FM-X 14 / Li-ion (N, W, EW)*

				FM-X 14 / Li-ion	FM-X 14 N	FM-X 14 W / Li-ion	FM-X 14 EW / Li-ion
5.4	Reach speed with/without load		m/s	0.18	0.18	0.18	0.18
5.7	Climbing capability with/without load		%	10/15	10/15	10/15	10/15
5.8	Max. climbing capability with/without load		%	15/20	15/20	15/20	15/20
5.9	Acceleration time (over 10 m) with/without load		s	4.5/4.0	4.5/4.0	4.5/4.0	4.5/4.0
5.10	Service brake			Regenera-tive, elec-trical/ hy-draulic	Regen-erative, electrical/ hydraulic	Regen-erative, electrical/ hydraulic	Regen-erative, electrical/ hydraulic

Electric motor

				FM-X 14 / Li-ion	FM-X 14 N	FM-X 14 W / Li-ion	FM-X 14 EW / Li-ion
6.1	Traction motor, power rating at S2 = 60 min		kW	6.5	6.5	6.5	6.5
6.2	Lift motor, power rating at S3 = 15%		kW	14	14	14	14
6.3	Battery in accordance with DIN 43531/35/36 A, B, C, no			43531 C/254-2	43531 B/254-2	43531 C/254-2	43531 C/254-2
6.4	Battery voltage/nominal capacity K5		V/Ah	48/465, Li-ion: 48/204	48/465	48/620, Li-ion: 48/204	48/620, Li-ion: 48/204
6.5	Battery weight (±5% depending on the manufacturer)		kg	750	750	940	940
6.6	Energy consumption in accordance with the VDI cycle		kWh/h	3.40	3.40	3.40	3.40

Other

				FM-X 14 / Li-ion	FM-X 14 N	FM-X 14 W / Li-ion	FM-X 14 EW / Li-ion
10.1	Working pressure for attachment		bar	200	200	200	200
10.2	Oil flow for attachments		l/min	20	20	20	20
10.7	Sound pressure level in driver's compartment		dB(A)	69	69	69	69

VDI datasheet for FM-X 17 / Li-ion (N, W, EW)*

* Subject to change

All dimensions include the mast sideshift or fork sideshifter

1 For larger batteries, decreases by 72 mm for each battery size on the FM-X, FM-X W, FM-X EW models. For larger batteries, decreases by 90 mm for each battery size on the FM-X N model

2 Aisle width for a 1000 x 1200 pallet, crosswise:

- For larger batteries, increases by 56 mm for each battery size on the FM-X, FM-X W, FM-X EW models
- For larger batteries, increases by 74 mm for each battery size on the FM-X N model Aisle width for a 800 x 1200 pallet, lengthwise:
- For larger batteries, increases by 66 mm for each battery size on the FM-X, FM-X W, FM-X EW models
- For larger batteries, increases by 85 mm for each battery size on the FM-X N model

3 Depending on the lift mast, with sideshift/fork tilt: 2°/4°

4 When the cab/weather protection option is selected, the height h6 is 2180 mm

5 When the cab option is selected, the length increases by 150 mm

6 For larger batteries, increases by 72 mm for each battery size on the FM-X, FM-X W, FM-X EW models. For larger batteries, increases by 90 mm for each battery size on the FM-X N model

Key data

				FM-X 17 / Li-ion	FM-X 17 N	FM-X 17 W / Li-ion	FM-X 17 EW / Li-ion
1.1	Manufacturer			STILL	STILL	STILL	STILL
1.2	Manufacturer's type designation			FM-X 17 / Li-ion	FM-X 17 N	FM-X 17 W / Li-ion	FM-X 17 EW / Li-ion
1.3	Drive			Electric	Electric	Electric	Electric
1.4	Operation			Seating device	Seating device	Seating device	Seating device
1.5	Load capacity/load	Q	kg	1700	1700	1700	1700
1.6	Load centre of gravity	c	mm	600	600	600	600
1.8	Load distance 1	x	mm	410	325	338	338
1.9	Wheelbase	y	mm	1453	1453	1453	1453

Weights

				FM-X 17 / Li-ion	FM-X 17 N	FM-X 17 W / Li-ion	FM-X 17 EW / Li-ion
2.1	Net weight (including battery)		kg	3470	3500	3740	3790
2.3	Front/rear axle load without load		kg	2290/1180	2220/1280	2390/1350	2440/1350
2.4	Front/rear axle load, fork forwards, with load		kg	730/4440	670/4520	900/4550	950/4550
2.5	Front/rear axle load, fork backwards, with load		kg	2030/3140	1850/3340	2050/3390	2100/3390

Wheels, chassis frame

				FM-X 17 / Li-ion	FM-X 17 N	FM-X 17 W / Li-ion	FM-X 17 EW / Li-ion
3.1	Tyres			Polyureth-ane	Polyureth-ane	Polyuret-hane	Polyuret-hane
3.2	Front tyre size		mm	∅ 360 x 130	∅ 360 x 130	∅ 360 x 130	∅ 360 x 130
3.3	Rear tyre size		mm	∅ 285 x 100	∅ 285 x 100	∅ 285 x 100	∅ 285 x 100
3.5	Number of wheels (x = driven), front/rear			1x/2	1x/2	1x/2	1x/2
3.7	Rear track width	b_{11}	mm	1167	1037	1367	1567

Basic dimensions

				FM-X 17 / Li-ion	FM-X 17 N	FM-X 17 W / Li-ion	FM-X 17 EW / Li-ion
4.1	Lift mast/fork carriage tilt, forwards/backwards 3	α/β	°	1/3	2/4	1/3	1/3
4.2	Height with lift mast retracted	h_1	mm	2450	2450	2450	2450
4.3	Free lift	h_2	mm	1880	1880	1880	1880
4.4	Lift	h_3	mm	5750	5750	5750	5750
4.5	Height with lift mast extended	h_4	mm	6320	6320	6320	6320
4.7	Height of overhead guard (cab) 4	h_6	mm	2200	2200	2200	2200
4.8	Seat height	h_7	mm	1140	1140	1140	1140

VDI datasheet for FM-X 17 / Li-ion (N, W, EW)*

				FM-X 17 / Li-ion	FM-X 17 N	FM-X 17 W / Li-ion	FM-X 17 EW / Li-ion
4.10	Height of load wheel supports	h_8	mm	308	308	308	308
4.19	Total length 2, 5, 6	l_1	mm	2412	2499	2484	2484
4.20	Length including fork back 2, 5, 6	l_2	mm	1262	1349	1334	1334
4.21	Overall width	b_1/b_2	mm	1270	1140	1470	1670
4.22	Fork arm dimensions, DIN ISO 2331	s/e/l	mm	50/ 100/ 1150	50/ 100/ 1150	50/ 100/ 1150	50/ 100/ 1150
4.23	Fork carriage to ISO 2328, class/model A, B			2/A	2/A	2/A	2/A
4.24	Fork carriage width	b_3	mm	760	760	760	760
4.25	Width over forks, min./max.	b_5	mm	316/620	316/620	316/620	316/620
4.26	Width between load wheel supports	b_4	mm	920	790	1120	1320
4.28	Reach forward 1	l_4	mm	591	505	519	519
4.31	Ground clearance with load below lift mast	m_1	mm	70	70	70	70
4.32	Ground clearance at the centre of the wheelbase	m_2	mm	70	70	70	70
4.34.1	Aisle width for a 1000 x 1200 pallet, crosswise 2	A_{st}	mm	2752	2795	2844	2879
4.34.2	Aisle width for a 800 x 1200 pallet, lengthwise 2	A_{st}	mm	2796	2854	2901	2936
4.35	Turning radius	W_a	mm	1710	1691	1750	1785
4.37	Length across the load wheel supports	l_7	mm	1817	1819	1817	1817
4.43	Step height		mm	345	345	345	345

Performance data

				FM-X 17 / Li-ion	FM-X 17 N	FM-X 17 W / Li-ion	FM-X 17 EW / Li-ion
5.1	Driving speed with/without load		km/h	14/14	14/14	14/14	14/14
5.1.1	Reverse driving speed with/without load		km/h	14/14	14/14	14/14	14/14
5.2	Lifting speed with/without load		m/s	0.45/0.68	0.45/0.68	0.45/0.68	0.45/0.68
5.3	Lowering speed with/without load		m/s	0.55/0.52	0.55/0.52	0.56/0.52	0.56/0.52

				FM-X 17 / Li-ion	FM-X 17 N	FM-X 17 W / Li-ion	FM-X 17 EW / Li-ion
5.4	Reach speed with/without load		m/s	0.18	0.18	0.18	0.18
5.7	Climbing capability with/without load		%	10/15	10/15	10/15	10/15
5.8	Max. climbing capability with/without load		%	15/20	15/20	15/20	15/20
5.9	Acceleration time (over 10 m) with/without load		s	4.5/4.0	4.5/4.0	4.5/4.0	4.5/4.0
5.10	Service brake			Regenera-tive, elec-trical/ hy-draulic	Regen-erative, electrical/ hydraulic	Regen-erative, electrical/ hydraulic	Regen-erative, electrical/ hydraulic

Electric motor

				FM-X 17 / Li-ion	FM-X 17 N	FM-X 17 W / Li-ion	FM-X 17 EW / Li-ion
6.1	Traction motor, power rating at S2 = 60 min		kW	6.5	6.5	6.5	6.5
6.2	Lift motor, power rating at S3 = 15%		kW	14	14	14	14
6.3	Battery in accordance with DIN 43531/35/36 A, B, C, no			43531 C/254-2	43531 B/254-2	43531 C/254-2	43531 C/254-2
6.4	Battery voltage/nominal capacity K_5		V/Ah	48/465, Li-ion: 48/204	48/465	48/420, Li-ion: 48/817	48/620, Li-ion: 48/817
6.5	Battery weight (±5% depending on the manufacturer)		kg	750	750	940	940
6.6	Energy consumption in accordance with the VDI cycle		kWh/h	3.56	3.56	3.56	3.56

Other

				FM-X 14 / Li-ion	FM-X 14 N	FM-X 14 W / Li-ion	FM-X 14 EW / Li-ion
10.1	Working pressure for attachment		bar	200	200	200	200
10.2	Oil flow for attachments		l/min	20	20	20	20
10.7	Sound pressure level in driver's compartment		dB(A)	69	69	69	69

VDI datasheet for FM-X 20 / Li-ion (N, W, EW)*

*Subject to change

All dimensions include the mast sideshift or fork sideshifter

1 For larger batteries, decreases by 72 mm for each battery size on the FM-X, FM-X W, FM-X EW models. For larger batteries, decreases by 90 mm for each battery size on the FM-X N model

2 Aisle width for a 1000 x 1200 pallet, crosswise:

- For larger batteries, increases by 56 mm for each battery size on the FM-X, FM-X W, FM-X EW models
- For larger batteries, increases by 74 mm for each battery size on the FM-X N model Aisle width for a 800 x 1200 pallet, lengthwise:
- For larger batteries, increases by 66 mm for each battery size on the FM-X, FM-X W, FM-X EW models
- For larger batteries, increases by 85 mm for each battery size on the FM-X N model

3 Depending on the lift mast, with sideshift/fork tilt: 2°/4°

4 When the cab/weather protection option is selected, the height h6 is 2180 mm

5 When the cab option is selected, the length increases by 150 mm

6 For larger batteries, increases by 72 mm for each battery size on the FM-X, FM-X W, FM-X EW models. For larger batteries, increases by 90 mm for each battery size on the FM-X N model

Characteristics

				FM-X 20 / Li-ion	FM-X 20 N	FM-X 20 W / Li-ion	FM-X 20 EW / Li-ion
1.1	Manufacturer			STILL	STILL	STILL	STILL
1.2	Manufacturer's type designation			FM-X 20 / Li-ion	FM-X 20 N	FM-X 20 W / Li-ion	FM-X 20 EW / Li-ion
1.3	Drive			Electric	Electric	Electric	Electric
1.4	Operation			Seating device	Seating device	Seating device	Seating device
1.5	Load capacity/load	Q	kg	2000	2000	2000	2000
1.6	Load centre of gravity	c	mm	600	600	600	600
1.8	Load distance 1	x	mm	410	307	410	410
1.9	Wheelbase	y	mm	1525	1525	1525	1525

VDI datasheet for FM-X 20 / Li-ion (N, W, EW)*

Weights

				FM-X 20 / Li-ion	FM-X 20 N	FM-X 20 W / Li-ion	FM-X 20 EW / Li-ion
2.1	Net weight (including battery)		kg	3820	3830	3870	3920
2.3	Axle load without front/rear load		kg	2470/1350	2450/1380	2490/1380	2510/1410
2.4	Axle load with fork forwards with front/rear load		kg	820/5000	830/5010	840/5030	860/5060
2.5	Front/rear axle load, fork backwards, with load		kg	2180/3640	2010/3820	2200/3670	2220/3700

Wheels, chassis frame

				FM-X 20 / Li-ion	FM-X 20 N	FM-X 20 W / Li-ion	FM-X 20 EW / Li-ion
3.1	Tyres			Polyureth.	Polyureth.	Polyureth.	Polyureth.
3.2	Front tyre size		mm	∅ 360 x 130	∅ 360 x 130	∅ 360 x 130	∅ 360 x 130
3.3	Rear tyre size		mm	∅ 350 x 100	∅ 350 x 100	∅ 350 x 100	∅ 350 x 100
3.5	Number of wheels (x = driven), front/rear			1x/2	1x/2	1x/2	1x/2
3.7	Rear track width	b_{11}	mm	1167	1037	1367	1567

Basic dimensions

				FM-X 20 / Li-ion	FM-X 20 N	FM-X 20 W / Li-ion	FM-X 20 EW / Li-ion
4.1	Lift mast/fork carriage tilt, forwards/backwards 3	α/β	°	1/3	2/4	1/3	1/3
4.2	Height with lift mast retracted	h_1	mm	2450	2450	2450	2450
4.3	Free lift	h_2	mm	1880	1880	1880	1880
4.4	Lift	h_3	mm	5580	5580	5580	5580
4.5	Height with lift mast extended	h_4	mm	6150	6150	6150	6150
4.7	Height of overhead guard (cab) 4	h_6	mm	2200	2200	2200	2200
4.8	Seat height	h_7	mm	1140	1140	1140	1140

				FM-X 20 / Li-ion	FM-X 20 N	FM-X 20 W / Li-ion	FM-X 20 EW / Li-ion
4.10	Height of load wheel supports	h_8	mm	373	373	373	373
4.19	Total length 2, 5, 6	l_1	mm	2484	2589	2484	2484
4.20	Length including fork back 2, 5, 6	l_2	mm	1334	1439	1334	1334
4.21	Total width	b_1/b_2	mm	1270	1140	1470	1670
4.22	Fork arm dimensions, DIN ISO 2331	s/e/l	mm	50/ 100/ 1150	50/ 100/ 1150	50/ 100/ 1150	50/ 100/ 1150
4.23	Fork carriage to ISO 2328, class/model A, B			2/A	2/A	2/A	2/A
4.24	Fork carriage width	b_3	mm	760	760	760	760
4.25	Width across forks, min./max.	b_5	mm	316/620	316/620	316/620	316/620
4.26	Width between load wheel supports	b_4	mm	920	790	1120	1320
4.28	Reach forward 1	l_4	mm	623	520	623	623
4.31	Ground clearance with load under lift mast	m_1	mm	70	70	70	70
4.32	Ground clearance at centre of wheelbase	m_2	mm	70	70	70	70
4.34.1	Aisle width for a 1000 x 1200 pallet, crosswise 2	A_{st}	mm	2820	2879	2857	2892
4.34.2	Aisle width for a 800 x 1200 pallet, lengthwise 2	A_{st}	mm	2864	2941	2901	2936
4.35	Turning radius	W_a	mm	1778	1762	1815	1850
4.37	Length across the load wheel supports	l_7	mm	1922	1924	1922	1922
4.43	Step height		mm	345	345	345	345

Performance data

				FM-X 20 / Li-ion	FM-X 20 N	FM-X 20 W / Li-ion	FM-X 20 EW / Li-ion
5.1	Driving speed with/without load		km/h	14/14	14/14	14/14	14/14
5.1.1	Reverse driving speed with/without load		km/h	14/14	14/14	14/14	14/14
5.2	Lifting speed with/without load		m/s	0.37/0.58	0.37/0.58	0.37/0.58	0.37/0.58
5.3	Lowering speed with/without load		m/s	0.53/0.50	0.53/0.50	0.53/0.50	0.53/0.50

VDI datasheet for FM-X 20 / Li-ion (N, W, EW)*

				FM-X 20 / Li-ion	FM-X 20 N	FM-X 20 W / Li-ion	FM-X 20 EW / Li-ion
5.4	Reach speed with/without load		m/s	0.18	0.18	0.18	0.18
5.7	Climbing capability with/without load		%	10/15	10/15	10/15	10/15
5.8	Max. climbing capability with/without load		%	15/20	15/20	15/20	15/20
5.9	Acceleration time (over 10 m) with/without load		s	4.5/4.0	4.5/4.0	4.5/4.0	4.5/4.0
5.10	Service brake			Regenera-tive, elec-trical/ hy-draulic	Regen-erative, electrical/ hydraulic	Regen-erative, electrical/ hydraulic	Regen-erative, electrical/ hydraulic

Electric motor

				FM-X 20 / Li-ion	FM-X 20 N	FM-X 20 W / Li-ion	FM-X 20 EW / Li-ion
6.1	Traction motor, power rating at S2 = 60 min		kW	6.5	6.5	6.5	6.5
6.2	Lift motor, power rating at S3 = 15%		kW	14	14	14	14
6.3	Battery in accordance with DIN 43531/35/36 A, B, C, no			43531 C/254-2	43531 B/254-2	43531 C/254-2	43531 C/254-2
6.4	Battery voltage/nominal capacity K_5		V/Ah	48/620, Li-ion: 48/817	48/620	48/620, Li-ion: 48/817	48/620, Li-ion: 48/817
6.5	Battery weight (±5% depending on the manufacturer)		kg	940	940	940	940
6.6	Energy consumption in accordance with VDI cycle		kWh/h	3.59	3.59	3.59	3.59

Other

				FM-X 20 / Li-ion	FM-X 20 N	FM-X 20 W / Li-ion	FM-X 20 EW / Li-ion
10.1	Working pressure for attachment		bar	200	200	200	200
10.2	Oil flow for attachments		l/min	20	20	20	20
10.7	Sound pressure level in driver's compartment		dB(A)	69	69	69	69

VDI datasheet for FM-X 20 HD / Li-ion*

*Subject to change

All dimensions include the mast sideshift or fork sideshifter

1 For larger batteries, decreases by 72 mm for each battery size on the FM-X, FM-X W, FM-X EW models. For larger batteries, decreases by 90 mm for each battery size on the FM-X N model

2 Aisle width for a 1000 x 1200 pallet, crosswise:

- For larger batteries, increases by 56 mm for each battery size on the FM-X, FM-X W, FM-X EW models
- For larger batteries, increases by 74 mm for each battery size on the FM-X N model Aisle width for a 800 x 1200 pallet, lengthwise:
- For larger batteries, increases by 66 mm for each battery size on the FM-X, FM-X W, FM-X EW models
- For larger batteries, increases by 85 mm for each battery size on the FM-X N model

3 Depending on the lift mast, with sideshift/fork tilt: 2°/4°

4 When the cab/weather protection option is selected, the height h6 is 2180 mm

5 When the cab option is selected, the length increases by 150 mm

6 For larger batteries, increases by 72 mm for each battery size on the FM-X, FM-X W, FM-X EW models. For larger batteries, increases by 90 mm for each battery size on the FM-X N model

Key data

				FM-X 20 HD / Li-ion
1.1	Manufacturer			STILL
1.2	Manufacturer's type designation			FM-X 20 HD / Li-ion
1.3	Drive			Electric
1.4	Operation			Seating device
1.5	Load capacity/load	Q	kg	2000
1.6	Load centre of gravity	c	mm	600
1.8	Load distance 1	x	mm	482
1.9	Wheelbase	y	mm	1669

Weights

				FM-X 20 HD / Li-ion
2.1	Net weight (including battery)		kg	5110
2.3	Front/rear axle load without load		kg	3030/2080
2.4	Front/rear axle load with fork forwards and with load		kg	900/6410
2.5	Front/rear axle load, fork backwards, with load		kg	2810/4500

Wheels, chassis frame

				FM-X 20 HD / Li-ion
3.1	Tyres			Polyurethane
3.2	Front tyre size		mm	∅ 360 x 140
3.3	Rear tyre size		mm	∅ 350 x 100
3.5	Number of wheels (x = driven), front/rear			1x/2
3.7	Rear track width	b_{11}	mm	1167

Basic dimensions

				FM-X 20 HD / Li-ion
4.1	Lift mast/fork carriage tilt, forwards/backwards 3	α/β	°	2/4
4.2	Height with lift mast retracted	h_1	mm	5200
4.3	Free lift	h_2	mm	4578
4.4	Lift	h_3	mm	12,500
4.5	Height with lift mast extended	h_4	mm	13,122
4.7	Height of overhead guard (cab) 4	h_6	mm	2200
4.8	Seat height	h_7	mm	1140
4.10	Height of load wheel supports	h_8	mm	373
4.19	Total length 2, 5, 6	l_1	mm	2556
4.20	Length including fork back 2, 5, 6	l_2	mm	1406
4.21	Overall width	b_1/b_2	mm	1270
4.22	Fork arm dimensions, DIN ISO 2331	s/e/l	mm	50/ 120/ 1150
4.23	Fork carriage to ISO 2328, class/model A, B			2/A

VDI datasheet for FM-X 20 HD / Li-ion*

				FM-X 20 HD / Li-ion
4.24	Fork carriage width	b_3	mm	760
4.25	Width across forks, min./max.	b_5	mm	336/640
4.26	Width between load wheel supports	b_4	mm	920
4.28	Reach forward 1	l_4	mm	695
4.31	Ground clearance with load under lift mast	m_1	mm	70
4.32	Ground clearance at centre of wheelbase	m_2	mm	50
4.34.1	Aisle width for a 1000 x 1200 pallet, crosswise 2	A_{st}	mm	2908
4.34.2	Aisle width for a 800 x 1200 pallet, length-wise 2	A_{st}	mm	2937
4.35	Turning radius	W_a	mm	1915
4.37	Length across the load wheel supports	l_7	mm	2066
4.43	Step height		mm	345

Performance data

				FM-X 20 HD / Li-ion
5.1	Driving speed with/without load		km/h	14/14
5.1.1	Reverse driving speed with/without load		km/h	14/14
5.2	Lifting speed with/without load		m/s	0.34/0.50
5.3	Lowering speed with/without load		m/s	0.52/0.50
5.4	Reach speed with/without load		m/s	0.18
5.7	Climbing capability with/without load		%	10/15
5.8	Max. climbing capability with/without load		%	15/20
5.9	Acceleration time (over 10 m) with/without load		s	4.5/4.0
5.10	Service brake			Regenerative, electrical/ hydraulic

Electric motor

				FM-X 20 HD / Li-ion
6.1	Traction motor, power rating at S2 = 60 min		kW	6.5
6.2	Lift motor, power rating at S3 = 15%		kW	14
6.3	Battery in accordance with DIN 43531/35/36 A, B, C, no			43531 C/254-2

				FM-X 20 HD / Li-ion
6.4	Battery voltage/nominal capacity K_5		V/Ah	48/775, Li-ion: 48/817
6.5	Battery weight (±5% depending on the manufacturer)		kg	1120
6.6	Energy consumption in accordance with VDI cycle		kWh/h	3.59

Other

				FM-X 20 HD / Li-ion
10.1	Working pressure for attachment		bar	200
10.2	Oil flow for attachments		l/min	20
10.7	Sound pressure level in driver's compart-ment		dB(A)	69

VDI datasheet for FM-X 25 / Li-ion (W, EW)*

*Subject to change

All dimensions include the mast sideshift or fork sideshifter

1 For larger batteries, decreases by 72 mm for each battery size on the FM-X, FM-X W, FM-X EW models. For larger batteries, decreases by 90 mm for each battery size on the FM-X N model

2 Aisle width for a 1000 x 1200 pallet, crosswise:

- For larger batteries, increases by 56 mm for each battery size on the FM-X, FM-X W, FM-X EW models
- For larger batteries, increases by 74 mm for each battery size on the FM-X N model Aisle width for a 800 x 1200 pallet, lengthwise:
- For larger batteries, increases by 66 mm for each battery size on the FM-X, FM-X W, FM-X EW models
- For larger batteries, increases by 85 mm for each battery size on the FM-X N model

3 Depending on the lift mast, with sideshift/fork tilt: 2°/4°

4 When the cab/weather protection option is selected, the height h6 is 2180 mm

5 When the cab option is selected, the length increases by 150 mm

6 For larger batteries, increases by 72 mm for each battery size on the FM-X, FM-X W, FM-X EW models. For larger batteries, increases by 90 mm for each battery size on the FM-X N model

Characteristics

				FM-X 25 / Li-ion	FM-X 25 W / Li-ion	FM-X 25 EW / Li-ion
1.1	Manufacturer			STILL	STILL	STILL
1.2	Manufacturer's type designation			FM-X 25 / Li-ion	FM-X 25 W / Li-ion	FM-X 25 EW / Li-ion
1.3	Drive			Electric	Electric	Electric
1.4	Operation			Seating device	Seating device	Seating device
1.5	Load capacity/load	Q	kg	2500	2500	2500
1.6	Load centre of gravity	c	mm	600	600	600
1.8	Load distance 1	x	mm	482	482	482
1.9	Wheelbase	y	mm	1669	1669	1669

Weights

				FM-X 25 / Li-ion	FM-X 25 W / Li-ion	FM-X 25 EW / Li-ion
2.1	Net weight (including battery)		kg	4110	4140	4170
2.3	Axle load without front/rear load		kg	2640/1470	2620/1520	2600/1570
2.4	Axle load with fork forwards with front/rear load		kg	810/5790	790/5840	770/5890
2.5	Front/rear axle load, fork backwards, with load		kg	2420/4190	2400/4240	2380/4290

Wheels, chassis frame

				FM-X 25 / Li-ion	FM-X 25 W / Li-ion	FM-X 25 EW / Li-ion
3.1	Tyres			Polyureth.	Polyureth.	Polyureth.
3.2	Front tyre size		mm	∅ 360 x 140	∅ 360 x 140	∅ 360 x 140
3.3	Rear tyre size		mm	∅ 350 x 100	∅ 350 x 100	∅ 350 x 100
3.5	Number of wheels (x = driven), front/rear			1x/2	1x/2	1x/2
3.7	Rear track width	b_{11}	mm	1167	1367	1567

Basic dimensions

				FM-X 25 / Li-ion	FM-X 25 W / Li-ion	FM-X 25 EW / Li-ion
4.1	Lift mast/fork carriage tilt, forwards/backwards 3	α/β	°	1/3	1/3	1/3
4.2	Height with lift mast retracted	h_1	mm	2450	2450	2450
4.3	Free lift	h_2	mm	1828	1828	1828
4.4	Lift	h_3	mm	5580	5580	5580
4.5	Height with lift mast extended	h_4	mm	6202	6202	6202
4.7	Height of overhead guard (cab) 4	h_6	mm	2200	2200	2200
4.8	Seat height	h_7	mm	1140	1140	1140
4.10	Height of load wheel supports	h_8	mm	373	373	373
4.19	Total length 2, 5, 6	l_1	mm	2556	2556	2556
4.20	Length including fork back 2, 5, 6	l_2	mm	1406	1406	1406
4.21	Total width	b_1/b_2	mm	1270	1470	1670

VDI datasheet for FM-X 25 / Li-ion (W, EW)*

				FM-X 25 / Li-ion	FM-X 25 W / Li-ion	FM-X 25 EW / Li-ion
4.22	Fork arm dimensions, DIN ISO 2331	s/e/l	mm	50/ 120/ 1150	50/ 120/ 1150	50/ 120/ 1150
4.23	Fork carriage to ISO 2328, class/model A, B			2/A	2/A	2/A
4.24	Fork carriage width	b_3	mm	760	760	760
4.25	Width across forks, min./max.	b_5	mm	336/640	336/640	336/640
4.26	Width between load wheel supports	b_4	mm	920	1120	1320
4.28	Reach forward 1	l_4	mm	695	695	695
4.31	Ground clearance with load under lift mast	m_1	mm	70	70	70
4.32	Ground clearance at centre of wheelbase	m_2	mm	50	50	50
4.34.1	Aisle width for a 1000 x 1200 pallet, crosswise 2	A_{st}	mm	2908	2943	2978
4.34.2	Aisle width for a 800 x 1200 pallet, lengthwise 2	A_{st}	mm	2937	2972	3007
4.35	Turning radius	W_a	mm	1915	1950	1985
4.37	Length across the load wheel supports	l7	mm	2066	2066	2066
4.43	Step height		mm	345	345	345

Performance data

				FM-X 25 / Li-ion	FM-X 25 W / Li-ion	FM-X 25 EW / Li-ion
5.1	Driving speed with/without load		km/h	14/14	14/14	14/14
5.1.1	Reverse driving speed with/without load		km/h	14/14	14/14	14/14
5.2	Lifting speed with/without load		m/s	0.34/0.50	0.34/0.50	0.34/0.50
5.3	Lowering speed with/without load		m/s	0.52/0.50	0.52/0.50	0.52/0.50
5.4	Reach speed with/without load		m/s	0.18	0.18	0.18
5.7	Climbing capability with/without load		%	10/15	10/15	10/15
5.8	Max. climbing capability with/without load		%	15/20	15/20	15/20

				FM-X 25 / Li-ion	FM-X 25 W / Li-ion	FM-X 25 EW / Li-ion
5.9	Acceleration time (over 10 m) with/without load		s	4.5/4.0	4.5/4.0	4.5/4.0
5.10	Service brake			Regenera-tive, electri-cal/ hydraulic	Regenera-tive, electri-cal/ hydraulic	Regenera-tive, electri-cal/ hydraulic

Electric motor

				FM-X 25 / Li-ion	FM-X 25 W / Li-ion	FM-X 25 EW / Li-ion
6.1	Traction motor, power rating at S2 = 60 min		kW	6.5	6.5	6.5
6.2	Lift motor, power rating at S3 = 15%		kW	14	14	14
6.3	Battery in accordance with DIN 43531/35/36 A, B, C, no			43531 C/254-2	43531 C/254-2	43531 C/254-2
6.4	Battery voltage/nominal capacity K_5		V/Ah	48/775, Li-ion: 48/817	48/775, Li-ion: 48/817	48/775, Li-ion: 48/817
6.5	Battery weight (±5% depend-ing on the manufacturer)		kg	1120	1120	1120
6.6	Energy consumption in accordance with VDI cycle		kWh/h	4.49	4.49	4.49

Other

				FM-X 25 / Li-ion	FM-X 25 W / Li-ion	FM-X 25 EW / Li-ion
10.1	Working pressure for attachment		bar	200	200	200
10.2	Oil flow for attachments		l/min	20	20	20
10.7	Sound pressure level in driver's compartment		dB(A)	69	69	69

Wheels and tyres

Permissible tyres

DANGER

The use of non-permissible tyres has a negative effect on the stability of the truck. Risk of accidents!

- Only use the types of tyre listed below.
- Observe the basic principles of safe operation; see the chapter entitled "Tyres".

It is recommended that you consult your service centre before carrying out any modifications.

Drive wheel

Polyurethane - direct bond

Model	Tyres
FM-X 10 (N) (standard versions)	∅ 360 x 130
FM-X 12 (N) (standard versions)	∅ 360 x 130
FM-X 14 (N) (standard versions)	∅ 360 x 130
FM-X 17 (N) (standard versions)	∅ 360 x 130
FM-X 20 (N, W, EW) (standard versions)	∅ 360 x 130
FM-X 22 (standard versions)	∅ 360 x 140
FM-X 25 (standard versions)	∅ 360 x 140

Load wheels

Polyurethane - direct bond

Model	Tyres
FM-X 10 (N) (standard versions)	∅ 285 x 100
FM-X 12 (N) (standard versions)	∅ 285 x 100
FM-X 14 (N) (standard versions)	∅ 285 x 100
FM-X 17 (N) (standard versions)	∅ 285 x 100
FM-X 20 (N, W, EW) (standard versions)	∅ 350 x 100
FM-X 22 (standard versions)	∅ 350 x 100
FM-X 25 (standard versions)	∅ 350 x 100

Battery specifications for lithium-ion batteries

– For more information, please refer to the nameplate and the operating instructions for the lithium-ion battery.

Performance characteristics

Battery group	Group 4.1	Group 4.2	Group 4.3
Cell connections	3 x 13s1p	12 x 13s1p	12 x 13s1p
Nominal energy	9800 Wh	39200 Wh	39200
Nominal capacity	201 Ah	804 Ah	804 Ah
Nominal voltage	48 V	48 V	48 V
Max. discharge current	400 A	400 A	400 A
Max. discharge power	18 kW	18 kW	18 kW

Dimensions and weights

Battery group	L x W x H (mm)	Weight (kg)
Group 4.1	1223 x 283 x 784	750
Group 4.2	1223 x 355 x 784	939
Group 4.3	1223 x 385 x 784	1119

NUMBERS AND SYMBOLS

180° steering 115
360° steering 114

A

Acknowledgement function using the shift button F 126, 128
Active Load Stabilisation ALS 166
Actuating the parking brake
When the truck is moving 113
Address of manufacturer I
Adjusting the fork 141
Ascending and descending gradients . . . 99
Attachments
Assembly 153
Controlling via the joystick 4Plus . . . 157
Controlling with the fingertip 160
General controlling 156
Mounting 154
Picking up a load 165
Releasing the pressure from the connections 155
Special risks 38
Automatic centre position
Tilting 129
Transition shift 129
Automatic lift cut out
Acknowledgement function using the shift button F 126
Automatic tilting centre position
Checking for correct function 91
Auxiliary equipment
Active Load Stabilisation ALS 166
Camera/monitor system 176
Clipboard 179
Driver's compartment, electrical 177
Load measurement 173
Shock recognition 166
Speed limitation 176
Working spotlight 93

B

Battery
Charging 225
Checking the acid level 223
Checking the charge status 225
Checking the condition 223
Disposal 19
Equalising charge 228
Lithium-ion batteries 243
Maintaining 222
Safety regulations 219
Battery acid 48
Battery change frame
Adjusting the transfer height 181
Area of application 180
Battery replacement area 182
General 179
Load capacity 180
Locking the swing bolt 181
Safe handling 180
Battery in the cold store 210
Battery lock
Adjusting 247
Locking the battery 246
Releasing the battery 246
Unlocking the battery 246
Battery male connector
Connecting 217
Disconnecting 218
Battery specifications 336
Before picking up a load 138
Blue-Q
Switching off 94
Switching on 94
Brake fluid 49

C

Cab
- Closing the door 202
- Drilling 31
- Emergency exit window 207
- General information 200
- Heating system 204
- Interior lighting 204
- Modifications 31
- Opening the door 201
- Operating devices 203
- Roof loads 31
- Welding 31

Camera/monitor system 176
CE labelling 2
Changes to the truck 29
Changing the battery
- Battery change frame 254
- General information 244
- Using the internal roller channel 254

Changing the fork arms 131
Checking the brake system for correct function 88
Checking the charge state of the lithium-ion battery 236
Checking the driver's seat 300
Checking the emergency off function . . . 90
Checking the wheel fastenings 302
Clamp locking mechanism with fingertip switch 164
Clamp locking mechanism with joystick . 162
Cleaning
- After cleaning 269
- Load chains 268
- Optical height measuring system . . . 169
- Panes of glass and mirrors 268
- Truck 264

Cleaning the electrical system 267
Climbing into the truck 77
Climbing out of the truck 77
Cold store equipment
- Description 209

Commissioning 8
Commissioning batteries that are delivered separately 242
Consumables
- Brake fluid safety information 49
- Disposal 50
- Safety information for handling battery acid 48
- Safety information for handling oils . . . 46
- Safety information for hydraulic fluid . . 47

Contact details I
Copyright and trademark rights 14
Crane loading
- Cab 276
- Determining the loading weight 273, 276
- Safety information 277
- Standard truck with overhead guard . 272

Curve Speed Control 95

D

Damage 33
Danger area 142
Danger areas of lithium-ion batteries 26
Danger to employees 43
Declaration of conformity 3
Declaring the use of lithium-ion batteries . 28
Defects 33
Defining directions 17
Dimensions 308
Dimensions of roadways 98

Display and operating unit 59
Accessing the main menu with a password 66
Accessing the main menu without a password 66
Authorisation levels for accessing operating data 65
Displays during the switch-on process 86
Entering operating data 65
Entering operating data in the main menu 68
Operating status displays 60
Overview of the menu structure 68
Display messages 61
Disposal
Battery 19
Components 19
Documentation scope 12
Drive programme
Creep speed 104
Setting 104
Driver qualification for use of lithium-ion batteries 28
Driver rights, duties and rules of behaviour 23
Driver's compartment, electrical 177
Drivers 23
Driving
On upward and downward gradients 151
Driving onto lifts 151

E

easy Target/easy Target Plus
Approaching target heights using easy Target 198
Overview 196
Positioning the fork horizontally using easy Target Plus 199
EC declaration of conformity in accordance with Machinery Directive 3
Electromagnetic parking brake 112
Emergencies
Truck tipping over 213
Emergency lowering 214
Emergency operation of the reach measurement system 115
Emergency shutdown 212
Emissions 51
Battery 53
Noise emissions 52
Radiation 53
Vibrations 52
Enabling truck functions
Foot switch 101
Seat switch 101
Example 140

F

Filling the washer system 84
Fingertip 72
Lifting/lowering the fork carriage . . . 125
Shifting 125
Tilting the lift mast 125
Transition shift 125
First-aid measures for working with lithium-ion batteries
Maintenance personnel 230
Fitting attachments 153
FleetManager 166
Activating the access control 51
Shock recognition 166
Foot switch 102
Fork arms
Length 35
Fork extension 134

G

General 2

H

Handling gas springs and accumulators . 35
Hazard assessment 28
Hazards and countermeasures 40

Hydraulic fluid 47
Hydraulic system
Checking for leaks 302

I

Illustration of lithium-ion batteries 234
Impermissible use 9
Information for carrying out maintenance 290
Maintenance timeframe 290
Information symbols 14
Insulation testing 44
Drive battery test values 45
Test values for the truck 45
Insurance cover on company premises . . 25
Issue date of the operating instructions . . 14

J

Jacking up 287
Joystick 4Plus 71
Lifting/lowering the fork carriage . . . 122
Shifting 124
Tilting the lift mast 123
Transition shift 123

L

Labelling points 5
Lashing trucks
With a cab 272
With an overhead guard 271
Lift height preselector
AUTO MODE function 186
Definition of terms 185
General 184
Operation 189
Performing a teach-in 193
Teach-in, general 192
Lift mast
Greasing the roller tracks 303
Lift mast versions 119
Telescopic lift mast 119
Triplex lift mast 120
Lifting 287
Lifting system
Fingertip 124
Joystick 4Plus 121
Operating device 120
Lighting 93
STILL SafetyLight 92
List of abbreviations 15
Lithium-ion batteries
Approved batteries 233
Battery weight and dimensions 232
Charging 239
Charging the battery after delivery . . 238
Checking the charge state 236
Danger areas 26
Declaring the use 28
Display 70
Driver qualification 28
Fire protection measures 231
First-aid measures 230
Hazard assessment 28
Illustration 234
Impermissible use in the shock cold store 210
Installing 249
Intended use 8
Maintenance personnel 230
Maintenance tasks 305
Permissible batteries 27
Procedure in the event of a fire 28
Product-specific dangers 26
Recommissioning following deep discharge 241
Regulations for storing 235
Safety regulations 230, 232
Special notes 25
Switching to lead-acid batteries 243
Transporting outside the premises . . . 29
Lithium-ion battery
Nameplate 7
Lithium-ion battery display 70

Load
Picking up 144
Setting down 149
Transporting 147
Load backrest 135
Load capacity 138
Load chains
Cleaning 268
Tension 137
Load measurement 173

M

Maintenance data table 299
Maintenance for trucks used in cold stores 305
Maintenance personnel for batteries . . . 254
Malfunctions in lifting mode 136
Medical equipment 34
Messages in the display 61
Misuse of safety systems 33
MSG 65/MSG 75 driver's seat 79
Adjusting the backrest extension 82
Adjusting the horizontal suspension . . 83
Adjusting the lumbar support 81
Adjusting the seat backrest 80
Adjusting the seat suspension 81
Moving 80
Switching the seat heater on and off . . 82

N

Nameplate 6
Neutral position 105

O

Oils 46
Operating company 22
Operating devices for hydraulic and traction functions 70
Operating materials
Quality and quantity 298
Operating the service brake 111
Operating the signal horn 88
Optical height measuring system 168
Cleaning 169
Elimination of malfunctions 170
Emergency operation in the event of malfunctions 171
OPTISPEED 95
Ordering spare parts and wearing parts . 298
Overhead guard
Drilling 31
Modifications 31
Roof loads 31
Welding 31
Overhead guard with optimised visibility 178
Overview 56
Accessories 4
Labelling points 5
Overview of the driver's compartment . . . 57

P

Packaging 19
Parking the truck securely 118
Permissible lithium-ion batteries 27
Personnel qualifications 289
Picking up loads 140
Place of use 9
Procedure if truck tips over 213
Procedure in the event of a fire when using lithium-ion batteries 28
Product-specific dangers of lithium-ion batteries 26
Production number 7
Prohibition of use by unauthorised persons 24
Proper usage 8

R

Re-commissioning after shutdown 283
Reach carriage
Emergency operation 115
Reach-lower lock
Acknowledgement function using the shift button F 128

Reduction of speed when turning 95
Regular inspections 44
Regulations for storing lithium-ion batteries 235
Removing the lift mast 288
Replacing the battery
Lithium-ion battery 249
Using a lifting device 249
Replacing the heating system filter 304
Residual dangers 37
Residual risks 37
Retrofitting 29
Reverse steering 115
Roadways . . . . . 98 – 99
Condition 100
Hazard areas 100
Rules for roadways and the working area 100
Roof loads 31

S

Safety devices 287
Safety inspection 44
Safety regulations for handling lithium-ion batteries 230
Battery weight and dimensions 232
Fire protection measures 231
Maintenance personnel 230
Safety regulations for handling the battery
Battery weight and dimensions 221
Damage to cables 222
Lifting accessories 221
Safety regulations for maintenance
General information 286
Safety devices 287
Set values 287
Working on the electrical equipment 286
Working on the hydraulic equipment 286
Safety regulations for working on the lift mast 288
Removing the lift mast 288
Securing the telescopic lift mast 289
Securing the triple mast 289
Safety regulations for working with lithium-ion batteries 232
Safety regulations when driving 96
Safety regulations when handing loads . 138
Safety regulations when handling the battery 219
Fire protection measures 220
Maintaining the battery 221
Maintenance personnel 219
Schematic views
Functions and operations 18
View on the display-operating unit . . . 18
Scope of the documentation
UPA solutions 13
Seat switch 103
Securing the telescopic lift mast 289
Securing the triple mast 289
Selecting the drive direction
Drive direction switch, joystick 4Plus variant 106
Fingertip drive direction switch 106
General 105
Set values 287
Setting the battery data
Onboard diagnostics 259
Shock recognition 166
Shutting down the truck 282
Side chassis supports 101
Special risks 38
Speed limitation
Button 176
Speed limitation based on lift height . 175
Speed limitation safety function 131
Stability 38
Standard steering 114
Starting drive mode
Dual-pedal version 109
Single-pedal version 107

Steering 114
Steering column
Adjusting 83
Steering system
Checking for correct function 90
Storing the truck 282
Switching on the key switch 85

T

Technical data
Dimensions 308
Lithium-ion batteries 336
VDI datasheet 309, 313, 318, 323, 328, 332
Topicality of the operating instructions . . 14
Towing 215
Transportation 269
Transporting pallets 143
Transporting suspended loads 143
Transporting the battery using a lifting device (lead acid batteries) 261
Transporting the battery using a lifting device (lithium-ion batteries) 263
Transporting the lithium-ion battery 29

U

Unlocking the emergency off switch 84
Using working platforms 11

V

Variants
Access authorisation with PIN code . . 87
Clamp locking mechanism with fingertip switch 164
Clamp locking mechanism with joystick 162
FleetManager 166
Fork extension 134
Lifting systems 119
View of functions and operating procedures 18
Visual inspections and function checking 74

W

Warning regarding non-original parts . . . 32
Wheels and tyres
Checking the condition and wear of the tyres 301
Checking the wheel fastenings 302
Maintaining 301
Safety principles 33
Technical data 335
Working at the front of the truck 288
Working on the electrical equipment . . . 286
Working on the hydraulic equipment . . . 286

STILL GmbH

50988078001 EN – 10/2018